FOUNDRYMATE

OPERATING MANUAL

Part Number: 084448-02

BAIRD

27 FORGE PARKWAY, FRANKLIN, MA 02038 TEL: 508-520-1880 FAX: 508-520-1732 WEB SITE: WORLD.STD.COM\~TJABAIRD\
A SUBSIDIARY OF THERMO OPTEK CORPORATION

FOUNDRYMATE
OPERATING MANUAL

PART NUMBER 084448-02

BAIRD

27 FORGE PARKWAY • FRANKLIN, MA 02038 • TEL: 508-520-1880 • FAX: 508-520-1732
A SUBSIDIARY OF THERMO OPTEK CORPORATION

SAFETY CAUTION

Due to design changes and product improvements, the information in this document is subject to change without notice. Baird reserves the right to change hardware and/or software design which may subsequently affect the contents of this operator's manual. Baird assumes no responsibility for any errors that may appear in this manual.

***** SAFETY WARNING *****

The methods and analytical procedures described in this manual are designed to be carried out by properly trained personnel in a suitably equipped laboratory. In common with many laboratory procedures, the methods described may involve hazardous materials or substances of unknown toxicity. For the correct and safe execution of the methods, it is essential that laboratory personnel follow standard safety procedures for the handling of hazardous materials.

While the greatest care has been exercised in the preparation of this information, Baird expressly disclaims any liability to users of these procedures for consequential damages of any kind arising out of or connected with the use of these procedures.

There are many sources of safety information available. Consult your chemical and laboratory supply catalogs. You may also refer to the CRC Handbook of Laboratory Safety, published by CRC Press, Inc., Boca Raton, Florida.

WARRANTY POLICY

BAIRD warrants instrumentation of its manufacture to be free from defects in material or workmanship and will, as its option, repair or replace, free of charge, or allow credit for any such goods found on examination by BAIRD to be defective under normal use and service within 120 days from date of shipment to customer, provided BAIRD is promptly notified in writing upon discovery of such defects and provided any necessary return charges are pre-paid. Thereafter, for up to one year from the shipment date, BAIRD shall furnish replacement parts, free of charge, to repair or correct defects in workmanship or material, provided that parts of BAIRD's manufacture supplied to customer during the above warranty period carry the warranty of the instrument; parts supplied after the expiration of such period are warranted for 30 days from the date of shipment. Replacement parts are on an exchange basis and will be new standard parts or parts of equal quality. Exchanged parts removed from the instrument shall become the property of BAIRD. Electronic, electrical, and other purchased components carry the guarantees of their respective manufacturers. Lamps, mercury bulbs and other expendable items are excluded from this warranty. BAIRD makes no warranty of merchantability or fitness for a particular purpose or any other warranty, expressed or implied, except as stated above.

While the greatest care has been exercised in the preparation of this information, BAIRD expressly disclaims any liability to users of these procedures for consequential damages of any kind arising out of or connected with the use of the procedures described herein.

TABLE OF CONTENTS

Chapter 9 Troubleshooting/Adjustment and Repair

Chapter 10 Remote Gun Operation

LIST OF FIGURES

1.1 OVERVIEW

The Baird FoundryMate (Figure 1-1) is a direct reading optical emission spectrometer system for the rapid analysis of elements in solids. The system is designed to be easy to use and requires minimum maintenance.

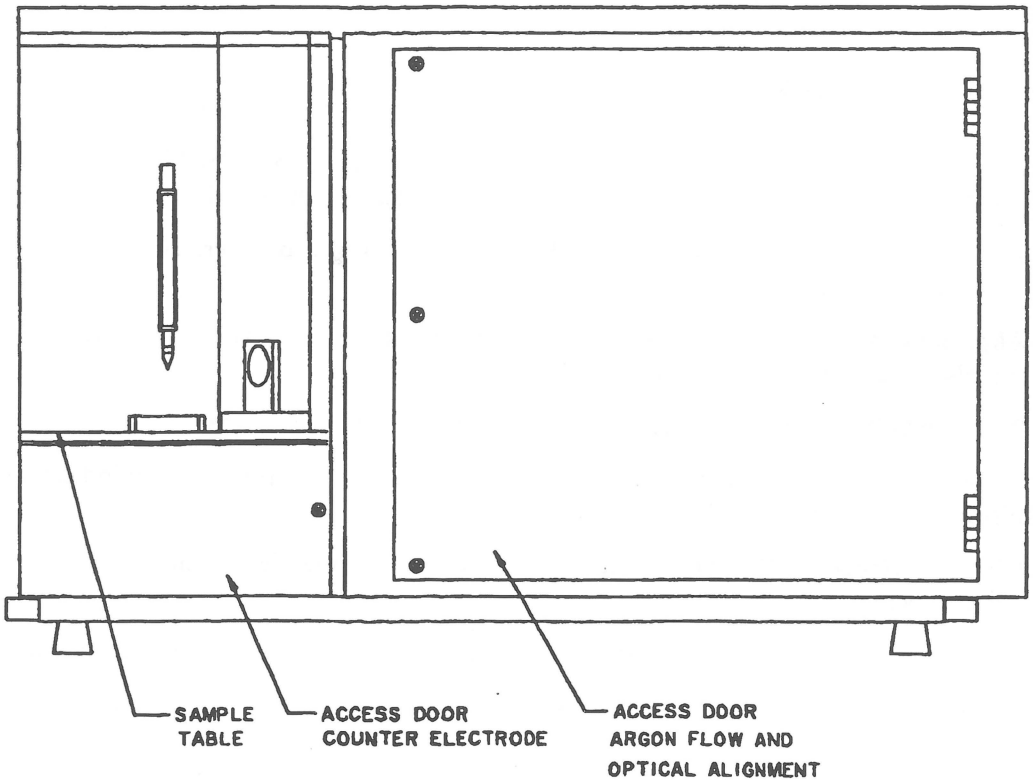

Figure 1-1: Baird FoundryMate Spectrometer System

The system includes the following components:

- A source to excite the sample
- A sample table to support the sample
- A spectrometer to disperse the emitted radiation
- A module to convert the signals for data processing
- A system interface board to provide communication to and from the computer
- A personal computer, application software and a printer

The instrument includes a 0.75 m optical system and can measure emission lines above 2000 A. A maximum of 32 channels can be incorporated in the system. Specific configuration information (e.g., the lines that are included) is indicated in the Customer Engineering binder that is provided with the system. An optional 1/2 meter spectrometer allows the measurement of emission lines below 2000 A.

All operations are performed via a personal computer and the applications software. The Baird Arc/Spark application software is a very flexible program which allows a considerable amount of customization. In general, this manual describes the default conditions for the application program.

The application program is edited during the installation process; therefore, it is possible that the display on your monitor and/or the data output will differ slightly from that shown in this manual. As an example, when a new sample is to be analyzed, the system default will prompt the operator to enter the Sample ID. If desired, the system can be programmed to automatically provide the next number in sequence, and/or request that the operator provide additional information. For a detailed discussion of the various options in the application software, refer to the Baird Arc/Spark Software Manual (part number 084449).

1.2 Contents of This Manual

- Chapter 2, **Preparing The System For Analysis**, describes the activities that should be performed on a daily basis, sampling handling considerations and how the sample is placed on the stand.
- Chapter 3, **Introduction To The Workstation And Application Program**, describes the layout of the analysis screen and how the application program is accessed.
- Chapter 4, **Alignment And Standardization Of The Instrument**, describes what a standard is, the different types of standards and explains how the instrument is standardized.
- Chapter 5, **Analysis Of Samples**, describes what happens when a sample is burned.
- Chapter 6, **Statistical Process Control Chart**, outlines the Process Control program and indicates how the operator can store and review Process Control data.
- Chapter 7, **Charge Calculation/Melt Correction Program**, outlines the Melt Addition calculations and describes how the operator employs this feature.
- Chapter 8, **Maintenance**, describes a series of procedures which should be performed on a periodic basis.
- Chapter 9, **Troubleshooting/Adjustment And Repair**, includes material to assist in diagnosing and remedying problems.
- Chapter 10, **Remote Gun Operation (option)**
- Appendices are provided which include the instrument specifications and a list of recommended spare parts and supplies.

1.3 Sources of Additional Information

This manual should be used in conjunction with the following documents:

- The Customer Engineering binder that is supplied with the instrument
- The manual for the computer that is provided with the instrument
- Baird Arc/Spark Software Manual (part number 084449)
- Baird Economelt Charge Calculation/Correction Software Operating Procedures (part number 080104)
- The Model HR-400 Spectrosource Instruction Manual (part number 080004)
- If additional information is required to ensure the maximum performance of the instrument, please contact your local Baird service representative.

CHAPTER 2 PREPARING THE SYSTEM FOR ANALYSIS

2.1 Overview

This chapter describes the operations that should be performed before samples are analyzed. In addition, it describes how samples should be prepared and placed on the sample table. The following information is included:

- Initial preparation of the system (Section 2.2)
- Daily (shift) maintenance (Section 2.3)
- Sampling handling considerations (Section 2.4)

2.2 Initial Preparation

Once the instrument is set-up, the electrical power and argon flow should be maintained on a continuous basis. This will ensure instrument stability and minimize the amount of time required to prepare the system for operation.

2.2.1 Power

There are two power switches on the FoundryMate spectrometer module, one on the left side and one on the right side of the instrument.

2.2.2 Argon

Argon gas of 99.996% purity with a maximum oxygen content of 5 ppm and a dew point of -60° C (-76° F) is required. If impure argon is used, the intensity of the observed lines may be reduced and the reported concentrations for the elements of interest may be invalid.

The argon should be supplied at a pressure of 20-25 psi (140-172 K Pa). During analysis the maximum gas flow is 12 SCFH (5.8 L/min), while the consumption is 2 SCFH (1L/min) between sample measurements. A flow meter is located inside the unit, which can be used in the event that it becomes necessary to check the flow rate.

NOTE: A milky burn spot on the sample is a good indication that impure argon is being used or that the argon pressure is low.

2.3 Daily Maintenance

2.3.1 Overview

The sample is burned on the analytical stand (Figure 2-1). When a sample is burned, a residue is deposited within the sample table and on the entrance window. The amount of residue that is deposited inside the table is dependent on the number of samples and the type of samples that are analyzed. It is recommended that the sample table and the entrance window be cleaned on a periodic basis (e.g., daily or at the start of each shift).

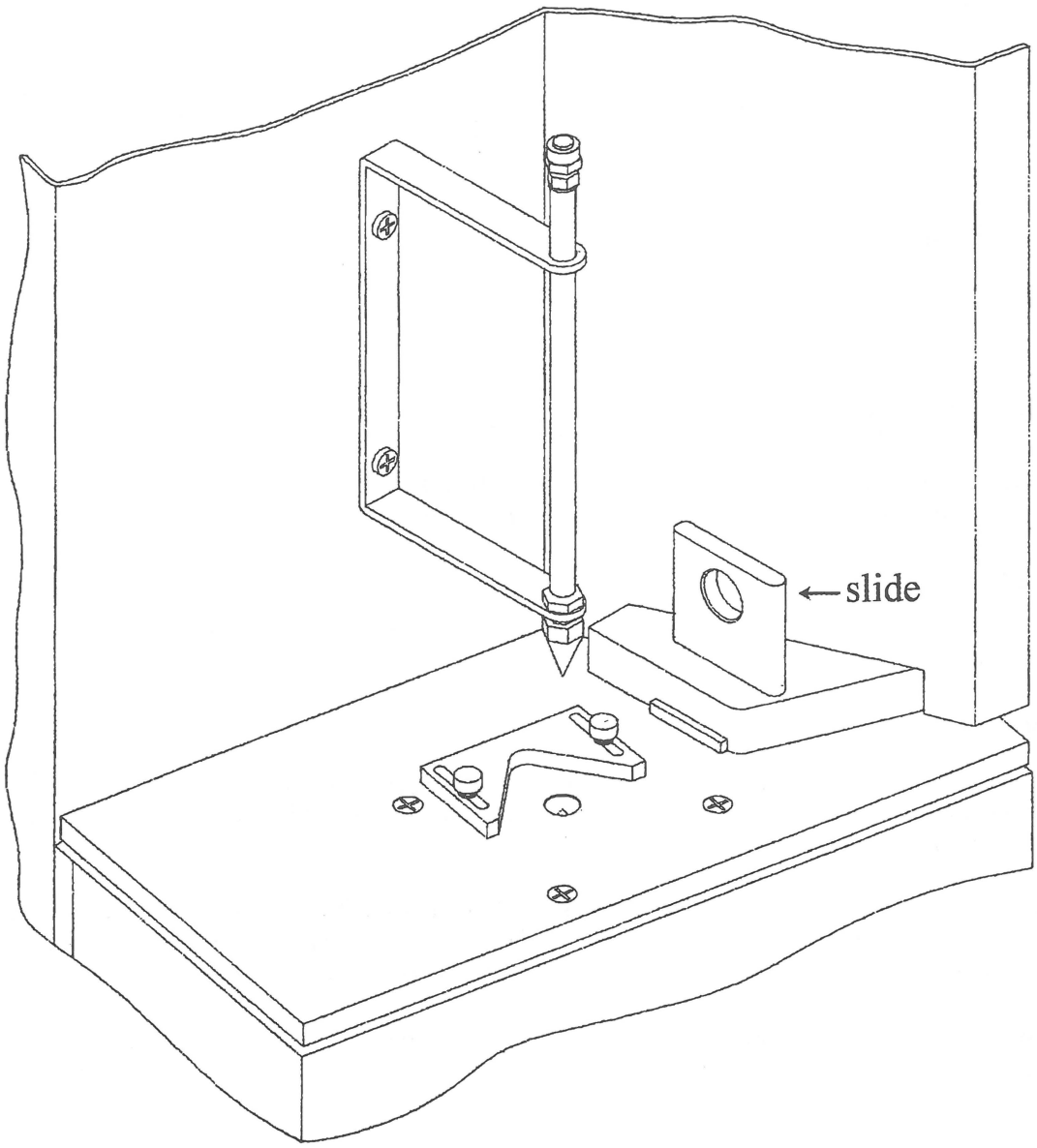

Figure 2-1: Analytical Stand

The following procedure is recommended:

- Clean the sample table (Section 2.3.2).
- Clean the entrance window (Section 2.3.3).
- Clean the counter electrode (Section 2.3.4).
- Reset the counter electrode gap (Section 2.3.5).
- Allow argon to flow through the system for a few minutes to flush air from the sample stand.
- Align the entrance slit (Section 4.2).
- Exercise the instrument by running a sample six times. This step is taken to ensure that the excitation chamber is free of air and water vapor and the system is well stabilized.

- Standardize the system (Section 4.3).

2.3.2 Clean the Sample Table

To clean the sample table:

- Wipe the residue from the table using a dry laboratory tissue (e.g., a Kimwipe™). **Do not use a liquid cleaner or detergent.**
- Insert the brush, which is provided in the analytical stand cleaning kit, inside the table and brush the bottom and inner walls of the cavity using a sweeping motion.
- Use the same brush to clean the sample exhaust tube on the sample stand after removing the tygon tubing.

2.3.3 Clean the Entrance Window

To clean the window:

- Remove the slide from the instrument (Figure 2-1).
- Clean the window using an aerosol cleaner such as the cleaning solution provided (part number 026132).
- Rinse the window with water and wipe dry with a dry laboratory tissue (e.g., a Kimwipe™).
- Replace the window.

2.3.4 Clean the Counter Electrode

The thoriated tungsten electrode should be conical and free of any debris. It can be cleaned using one of two brushes included in the standard cleaning kit (part number 060735). A stainless steel brush is to be used for harder metals, 'Fe', 'Ti', etc., and a nylon brush is included to clean debris when analyzing softer materials such as 'Al', 'Cu' and 'Zn'. Pass the brush through the stand aperture and carefully brush off debris from the electrode tip.

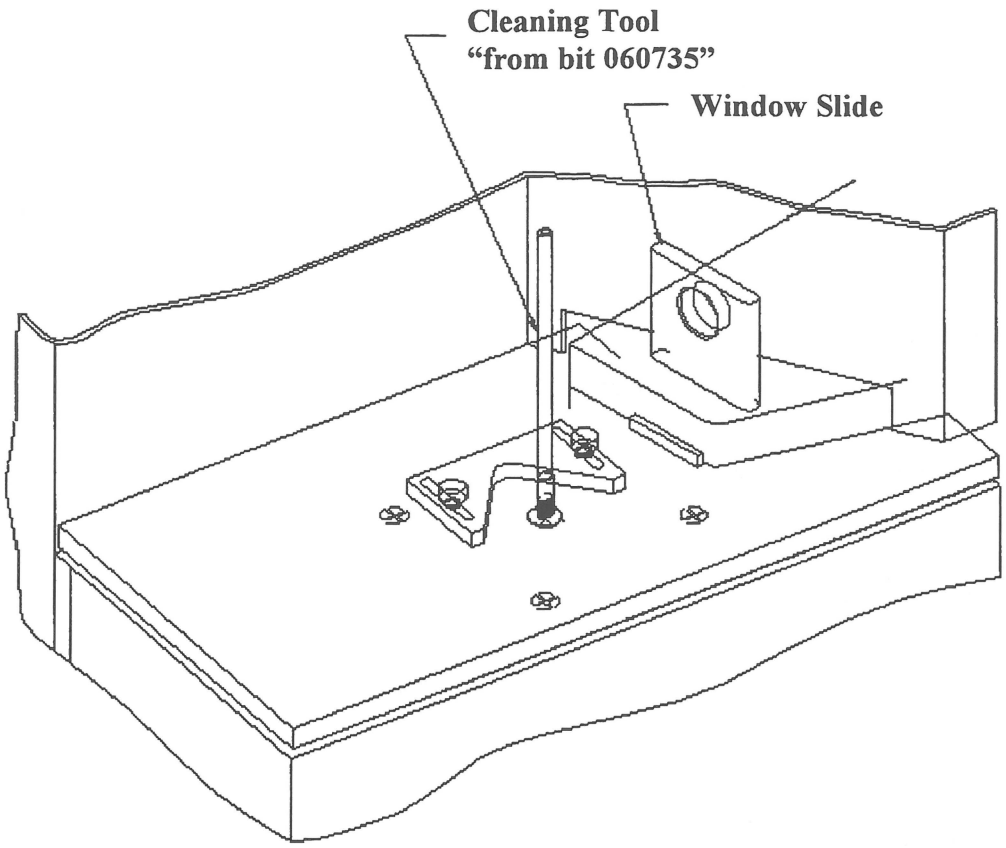

Figure 2-2: Cleaning the Counter Electrode

2.3.5 Reset the Counter Electrode Gap

The gap of the counter electrode should be set as shown in Figure 2-3 using the spacer that is provided with the instrument.

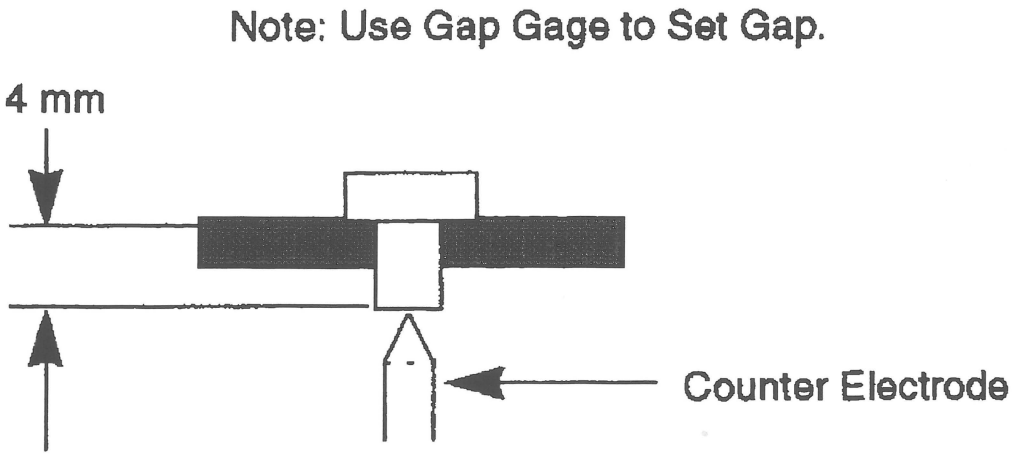

Figure 2-3: Correct Position of Counter Electrode

The electrode set screw on the counter electrode holder (Figure 2-4) is used to fix the position of the counter electrode. The door on the lower left front corner is opened to access the counter electrode region of the analytical stand.

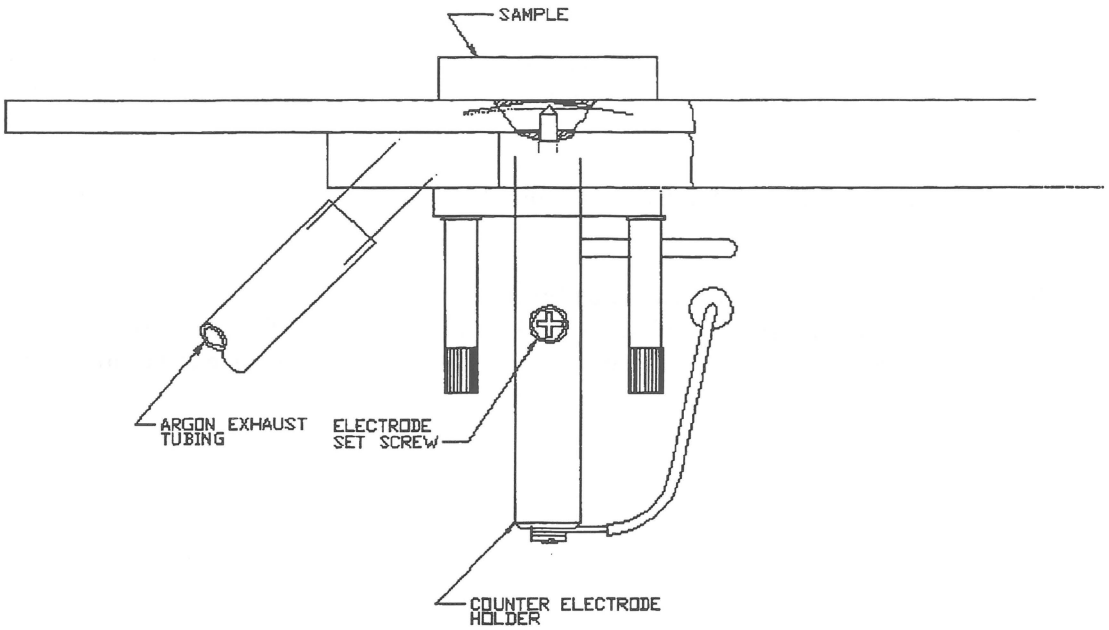

Figure 2-4: Counter Electrode Holder

2.4 Sample Handling Considerations

2.4.1 Sample Preparation

The sample should be:

- Homogeneous over the excitation surface
- Free from porosity
- Prepared to provide a flat surface
- Large enough to cover the aperture and maintain the argon seal in the excitation chamber

Typically, ferrous samples are quick chilled disks, 32-50 mm, (1.25-2.00") in diameter and 6-25 mm (0.25 to 1") thick. The chilled surface should be made flat using a belt or circular sander (#40-80 grit). For cast iron and other hard materials, it may be more economical over a long period to employ a surface grinder.

Non-ferrous samples are usually surfaced on a lathe with an automatic crossfeed to avoid smearing.

The surface of the sample must be free of extraneous materials such as moisture, oil, dust, scale, etc.

2.4.2 Placing the Sample on and Removing the Sample from the Sample Table

A consistent technique of placing the sample on the sample table will lead to more reproducible analyses. It is important to maintain the excitation point at a constant distance from the periphery of the disk [approximately 10 mm (3/8")]. A green LED light above the sample stand will light if a proper seal is achieved.

NOTE: **Do not slide the sample in place, as the sample may scratch the surface of the sample table. Instead, move the front edge into position while holding the rear edge up, and then lower the disk into the final position.**

When the command to analyze the sample is given, a small increase in the pressure of the argon gas forces the sample clamp against the sample.

To remove the sample after the analysis, carefully lift it from the sample table. Do not slide the sample off the table, as this may scratch the surface of the table. It is recommended that a sample is placed on the sample table when not operating the instrument to keep air from entering the excitation chamber.

CHAPTER 3 INTRODUCTION TO THE WORKSTATION AND APPLICATION PROGRAM

3.1 OVERVIEW

The FoundryMate spectrometer includes the Baird Arc/Spark Application Software program and an MS-DOS personal computer workstation. Essentially all interaction between the user and the system is via the personal computer (e.g., the F10 key is used to initiate a burn). Similarly, the analytical results are displayed on the computer monitor and a hard copy report is presented by the printer.

The application program is loaded onto the hard disk of the computer when the system is installed. It is suggested that the power to the computer module of the workstation be left on at all times, however the video monitor can be turned off if the unit will not be used for a significant period of time.

The application program is designed to provide a significant degree of flexibility and customization. In general, this manual describes the default conditions for the application program. If the application program has been edited, it is possible that the display on your monitor and/or the data output will differ slightly from that shown in this manual. As an example, when a new sample is to be analyzed, the system default will prompt the operator to enter the Sample ID. If desired, the system can be programmed to automatically provide the next number in sequence and/or request that the operator provide additional information (e.g., the source of the sample) for archival purposes.

A detailed discussion of the various options in the application software can be found in the Baird Arc Spark Software Manual (part number 084449).

The Analysis display (Figure 3-1) is used to access most of the functions of the system such as standardization and the analysis of samples.

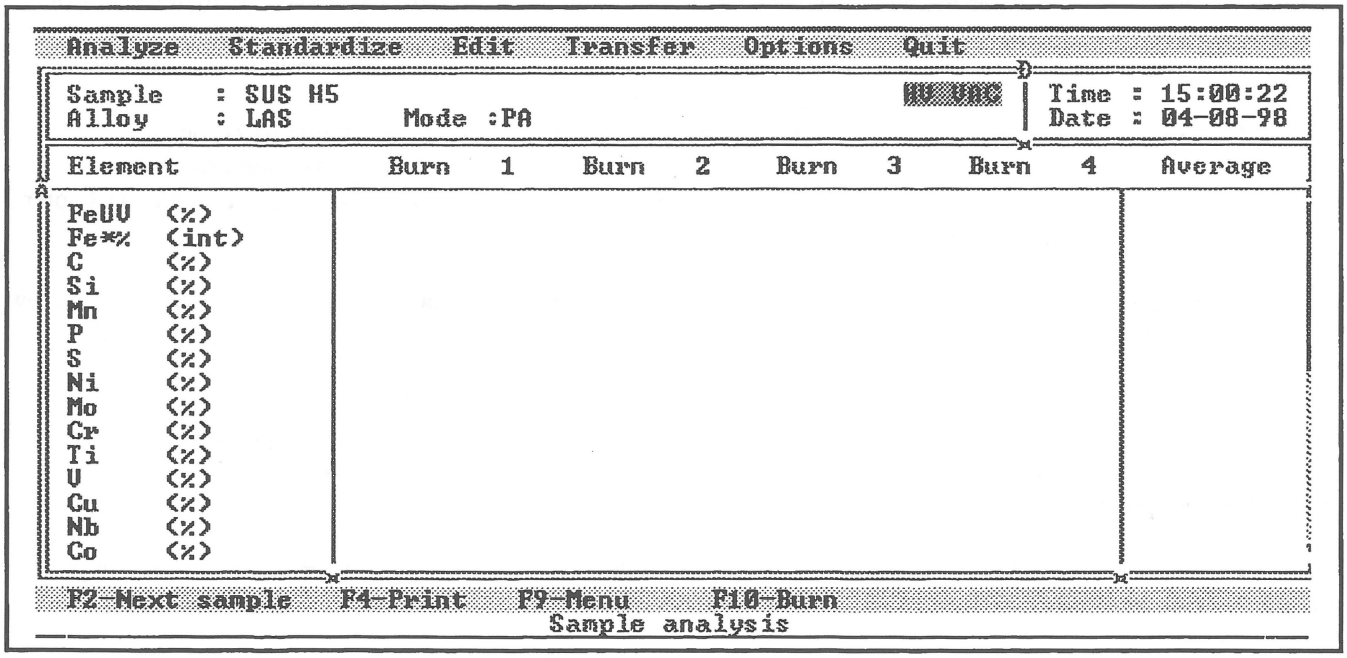

Figure 3-1: Analysis Display

3.2 ACCESSING THE ANALYSIS DISPLAY

To access the Analysis display from the C:\ prompt:

- Type **cd\BAIRDAS**. The monitor will present C:\>BAIRDAS _.
- Type **BAIRDAS** <Enter>. The display will present a greeting page.
- Press any key. The display will present the Main Menu (Figure 3-2).

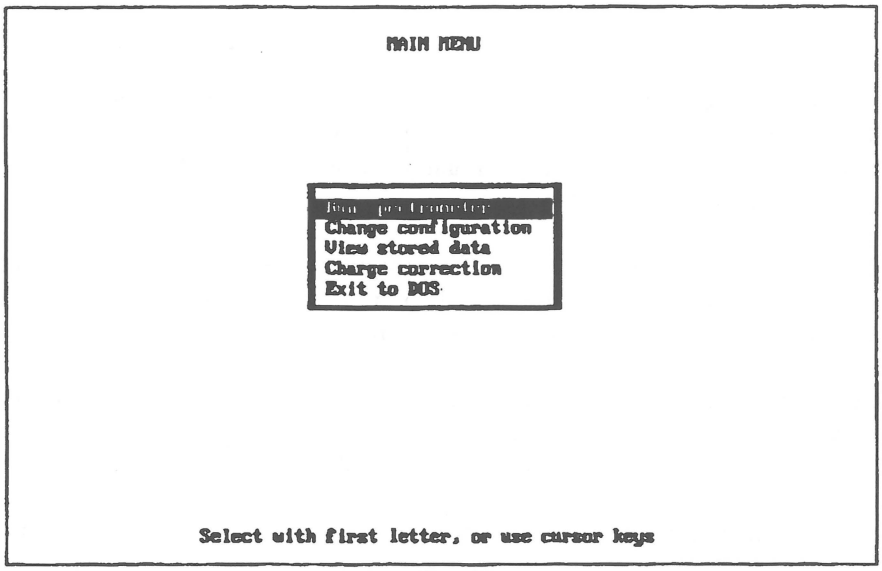

Figure 3-2: Main Menu

The role of the entries on the Main Menu are:

Run Spectrometer	Leads to the Analysis Program
Change Configuration	Accesses the windows for changing the system, computer or software configuration. For additional information, refer to Chapter 15 of the Baird Arc/Spark Software Manual.
View Stored Data	Used to access data from previous analysis. For additional information, refer to Chapter 14 of the Baird Arc/Spark Software Manual.
Charge Correction	Accesses the program that lets you determine the lowest cost charge based on the specification of the desired alloy and calculates the required charge additions to the furnace based on the present composition of the melt. For additional information, refer to Chapter 7 of this manual.

If you want to access the Charge Correction program, move the highlight to **Charge Correction** via the down arrow key or by pressing the letter C on the keyboard until **Charge Correction** is highlighted and press <Enter>. A description of the Charge Correction program is presented in Chapter 7.

If you want to acquire analytical data, ensure that the highlight is on **Run Spectrometer** and press <Enter>. The monitor will present a display which indicates the version number and the name of the instrument for which the program is configured.

When the version number/instrument name display is presented, press any key to continue. The monitor will present the Run Spectrometer display (Figure 3-3).

```
                    RUN SPECTROMETER
                                    Total analyses :   1583

                 SmartAlloy Analysis
                 Routine analysis
                 Optical alignment
                 Set-up / change alloy
                 File handling
                 System functions
                 Spectrometer status
                 Macro keys
                 Exit program

          Select with first letter, or use cursor keys
```

Figure 3-3: Run Spectrometer Display

The role of the entries on the Run spectrometer display are:

Routine Analysis	Presents the Analysis Display
Optical Alignment	Accesses the program to align the instrument. For additional information, refer to Section 4.2.
Set-up/Change Alloy	Accesses the menu to set analytical conditions, data processing and data reporting parameters. (An alloy is a collection of analytical conditions, data processing and data reporting parameters.) For additional information, refer to Chapters 6 and 7 of the Baird Arc/Spark Software Manual.
File Handling	Accesses the program for copying, deleting and backing up alloy files and/or data files. For additional information, refer to Chapter 12 of the Baird Arc/Spark Software Manual.
System Functions	Accesses a variety of programs to test the system and establish hardware parameters. For additional information, refer to Chapter 13 of the Baird Arc/Spark Software Manual.
Macro Keys	Accesses the display to establish or execute a macro, which is a series of commands to perform a specific series of operations.
Exit Program	Returns control to the Main menu.

The desired entry is made in the same way as described for the Main Menu.

Select **Routine Analysis**. The monitor will present a display indicating all of the alloys that are present on the BAIRDAS directory. Move the highlight to the desired alloy and press <Enter>. The monitor will present the analysis display with the Sample ID/Mode box superimposed on it (Figure 3-4).

```
Analyze   Standardize   Edit   Transfer   Options   Quit

Sample   :                                          AU UAC   Time : 15:02:35
Alloy    : LAS        Mode :                                 Date : 04-08-98

Element              Burn  1    Burn  2    Burn  3    Burn  4    Average
FeUV  (%)

 Sample ID : SUS H5
 Mode      : Concentration priority A

Mo    (%)
Cr    (%)
Ti    (%)
V     (%)
Cu    (%)
Nb    (%)
Co    (%)

↑↓-Choose   F10-Accept   Esc-Abort
```

Figure 3-4: Sample Analysis Display with Sample ID/Mode Box

3.3 Analysis Display

The Analysis display is used to coordinate a broad range of data acquisition/data reporting activities.

To burn a sample, place the sample on the sample table, enter the desired sample ID and press **F10**. For a detailed discussion of the analysis mode of the operation of the instrument, refer to Chapter 5.

For all other activities, press **Esc**. This erases the Sample ID/Mode box and presents the Analysis display (Figure 3-1).

There are four important areas in the Analysis display:

- Menu Bar (Section 3.3.1)
- Analysis Information (Section 3.3.2)
- Analytical Results (Section 3.3.3)
- Status Region (Section 3.3.4)

3.3.1 Menu Bar

The menu bar provides access to all commands that are available from the Analysis display. Each of the general headings leads to a number of options via a drop down menu. As an example, if you select Edit, the drop down menu shown in Figure 3-5 will be presented and Reject burn will be highlighted.

Figure 3-5: Edit Drop Down Menu

To access the menu bar, press **F9** or the **Alt** key. To access a specific heading, press **Alt** and the first letter of the desired heading at the same time (e.g., press **Alt + E** to access the **Edit** menu).

To select an entry within a given drop down menu, use the up or down arrow or type the first letter of the desired item (e.g., press **A** to select Average). The entries that are active on a given drop down menu are dependent on the options which have been selected during the set-up of the application program.

To access another drop down menu, use the left or right arrow.

To deactivate the menu bar, select **Esc**.

A discussion of the various entries in the drop down menus is presented in Section 3.4.

3.3.2 Analysis Information

The Analysis Information region presents information about the operation of the system, the sample name and the mode of data acquisition.

3.3.3 Analytical Results Display

The analytical results for each burn will be presented in the center of the display. If the number of elements is greater than can be listed on the display, the **Up arrow** key, the **Down arrow** key, the **Home** key, the **Pg Up** key, the **End** key and the **Pg Dn** key can be used to access additional information. The bar on the right side of the display indicates the status of the display.

The display presents four burns. If additional burns are made, the last four burns will be presented. The most recent burn number will blink. To access previous burns, use the Left arrow key.

3.3.4 Status Region

The status region indicates the present activity and the active function keys.

3.4 MENU BAR

The entries on the drop down menus of the Menu Bar depend on the features which have been selected for the alloy (i.e., some of the entries may not be presented on your system). Entries that are active at the present status of the operation of the instrument appear in white while entries that are not active at the present instrument status appear in gray.

Analyze	New Sample	Presents the Sample ID/Mode dialog box. Refer to Chapter 5 for details.
Standardize		Refer to Chapter 4 for additional information.
Edit	Reject Burn	Deletes the data for a burn.
	Average	Averages the data for the burns.
	Sample ID	Presents the Sample ID/Mode dialog box. Refer to Chapter 5 for details.
Transfer	Printer	Prints the burn data and average on the line printer using the format which has been established.
	Remote	Transmits the average to a remote device.
	File	Stores the average in a storage file.
Options	Special Calculations ON?	Calculates and displays additional information based on the manually entered elements and special calculation formulas. When **Special Calculation On?** is displayed, the calculation is not being performed.
	Analysis Report	Prints the report for the analysis in the format which has been established.
	Change Burn Mode	Presents the display to select the format for printing/transferring element burn information.
	Load Alloy	Presents the display to select the alloy to be used for operation of the system/data reporting.
	Change Alloy	Presents a listing of the various files that are in the alloy.
	Standard Deviation	Used to indicate that a table containing the average, standard deviation and RSD is desired. This function requires that at least three burns be made for a sample.
	Printer On?	Used to indicate that the printer should automatically print a report at the end of the burn. When **Printer On?** is displayed, the report will not be printed.
	Process Control Chart	Used to indicate that the Process Control Chart routine is desired. For additional information, refer to Chapter 6.
	Optical Alignment	Used to indicate that alignment of the entrance slit is desired. For additional information, refer to Chapter 4.
	RSD Storage ON?	Used to indicate that the Relative Standard Deviation should be stored with the burn data. When **RSD On?** is displayed, the RSD data will not be saved.
Quit		Returns to the Run Spectrometer Menu.

CHAPTER 4 ALIGNMENT AND STANDARDIZATION OF THE INSTRUMENT

4.1 Overview

Alignment refers to the optimization of the intensity of the signal. Alignment of the system is performed by "peaking" the intensity of one of the emission lines in the sample. A complete description of the alignment procedure is presented in Section 4.2. It is suggested that the instrument be aligned on a daily basis.

NOTE: The frequency of alignment is dependent on conditions in the facility where the instrument is used. As the operator gains experience with the instrument and the analysis, it may be possible to align the instrument less frequently.

Standardization refers to the correction of changes in the calibration curves for the elements being analyzed that are caused by small changes in the environment of the instrument (sometimes referred to as drift correction).

Two standardization modes are provided in the application software, full standardization and type standardization. The system should be standardized on a periodic basis by running set-up standards to determine new values for the offset and slope. Check standardization is included in the application software to permit a rapid determination if standardization is necessary.

4.2 Alignment of the System

Alignment dials for both the 3/4 meter and 1/2 meter (optional) spectrometer are located behind the front panel of the instrument. The alignment dial for the 1/2 meter is located on top of the 1/2 meter tank, and the dial for the 3/4 meter is mounted on the floor of the instrument in the center. The alignment procedure outlined below must be followed separately for each spectrometer. The procedure is identical for both.

NOTE: For the ½ meter optics, please note that the alignment dial works in the opposite direction as the ¾ meter. Therefore, you must reverse the clockwise and counterclockwise directions on the following page.

To initiate the alignment protocol, select **Optical Alignment** from the Run Spectrometer Menu or the Options drop down menu of the Analysis display menu bar. The display will present parameters used for alignment (Figure 4-1). These parameters have been selected when the instrument was set up, and should not be edited during normal operation. Press **F10** to accept the conditions.

```
ROUTINE TO CENTER THE POLYCHROMATOR

Set-up optical alignment

Stand                    : Primary        Secondary
                                          Primary

Preburn time             : 1

Preburn parameter    1 :  NO
Preburn parameter    2 :  NO
Preburn parameter    3 :  NO

Alignment parameter 1 :  NO
Alignment parameter 2 :  NO
Alignment parameter 3 :  NO

Alignment element        : Fe*%

↑↓-Choose   Space-Next   F2-List   F10-Accept   Esc-Abort
```

Figure 4-1: Polychromator Optimization Parameters Window

When **F10** is pressed, the **Routine to Center the Polychromator** display is presented (Figure 4-2) and the following steps should be performed.

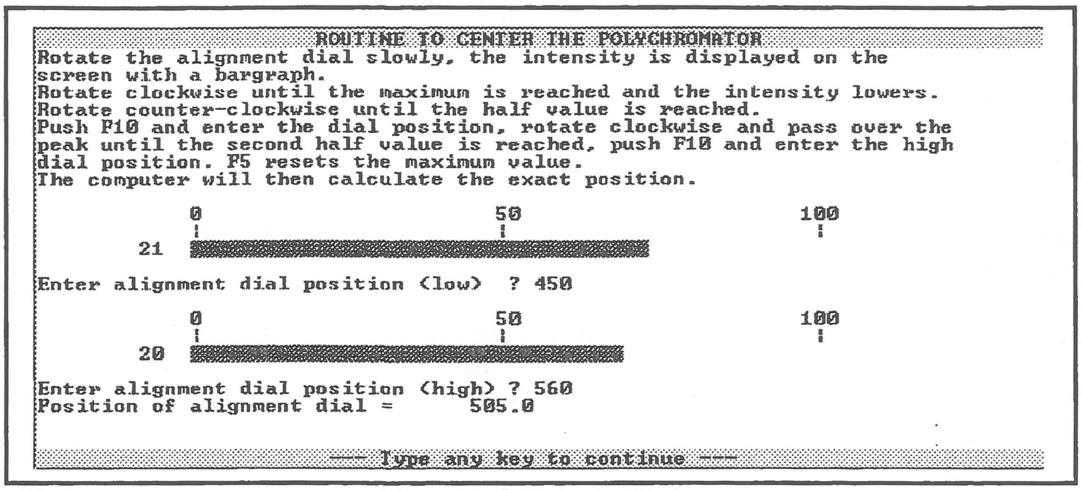

```
                    ROUTINE TO CENTER THE POLYCHROMATOR
Rotate the alignment dial slowly, the intensity is displayed on the
screen with a bargraph.
Rotate clockwise until the maximum is reached and the intensity lowers.
Rotate counter-clockwise until the half value is reached.
Push F10 and enter the dial position, rotate clockwise and pass over the
peak until the second half value is reached, push F10 and enter the high
dial position. F5 resets the maximum value.
The computer will then calculate the exact position.

            0                        50                       100
            |                        |                         |
        21

Enter alignment dial position (low)  ? 450

            0                        50                       100
            |                        |                         |
        20

Enter alignment dial position (high) ? 560
Position of alignment dial =      505.0

                      --- Type any key to continue ---
```

Figure 4-2: Optimization Display

Note: The sample clamp is automatically forced downward, when F10 is pressed. Make certain that there are no objects (e.g., your hand) in the vicinity of the sample when the run is initiated.

1. Place the alignment sample on the spark table and press F10. A burn will take place. Rotate the dial clockwise or counterclockwise until the maximum intensity has been reached.
2. Rotate the dial counterclockwise until the density indicates almost no intensity.
3. Rotate the dial clockwise until the value is one half of the observed maximum intensity.
4. Press F10, type in the dial position and type **Enter**.
5. Rotate the dial clockwise (intensity will increase) and pass over the peak. Continue to rotate the dial (intensity will decrease) until the intensity is again one half of the observed maximum.
6. Press F10, type in the dial position and press **Enter**. The program will automatically determine the optimum peak position and display it on the monitor.
7. Set the dial at the number indicated on the monitor by rotating clockwise.
8. Press ESC to return the Run Spectrometer menu or the Analysis screen.

Note: When checking the half intensity of the maximum and setting the peak position, rotate the dial clockwise in order to prevent a possible mechanical backlash.

4.3 STANDARDIZATION

4.3.1 INTRODUCTION TO STANDARDIZATION

The instrument should be standardized:

- At the beginning of each shift
- When a component is moved, cleaned or altered in any way.
- When the operator has reason to suspect the validity of the data from the burning of a sample.

4.3.2 MODES OF STANDARDIZATION

The application software provides the following standardization modes:

Full Standardization involves the burning of two (or more) standards, so that a high and a low standard is obtained for each element (Section 4.3.2.1). The slope and offset of the calibration curve are adjusted on the basis of the burn data.

Type Standardization involves the burning of a single standard. It is used when a standard contains the elements at the concentration typically found in the samples of interest. Additive or multiplicative type standardization can be used (Section 4.3.2.2).

Check Standardization involves the burning of a sample which was previously burned. If the system determines that the reported concentration for an element does not match the previous report (the accepted value), the program will prompt the operator to standardize the instrument. A major benefit of this method is that expensive standards are not consumed (Section 4.3.2.3).

Factor is used to view/edit the slope and offset (Section 4.4).
Element is used to select the element(s) to be standardized (Section 4.5).

The Standardization options are accessed from the menu bar on the Analysis Mode display via the **Standardization** drop down menu (Figure 4-3). The active entries will depend on the configuration of the alloy.

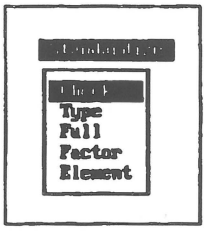

Figure 4-3: Standardization Drop Down Menu

4.3.2.1 FULL STANDARDIZATION

Full standardization involves the burning of two (or more) standards, so that a high and a low standard are obtained for each element line. When full standardization is selected, the display presents the standardization display (Figure 4-4). The heading includes the name of the low standardization sample that should be burned (A6), the Alloy name (LAS) and the mode (SF = standardization full).

If the standard contains the low (high) concentration for a specific element, the letter L (H) appears adjacent to the Orig. Val. (Original Value) entry. To toggle between last value and original, press **F6**.

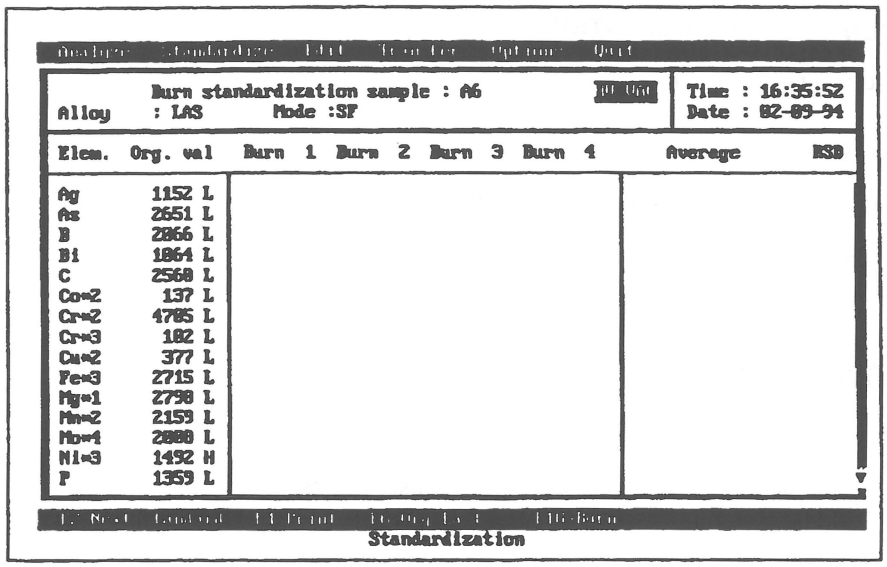

Figure 4-4: Full Standardization Display

To burn a standard, place it on the stand as described in Section 2.4.2 and press **F10**. After the burn takes place, the observed intensity for each line will be presented in the column labeled **Burn 1** and the number 1 will blink, indicating that this was the most recent burn.

Continue to burn this standard until sufficient data has been collected. The average and the RSD (if three or more burns are made) are presented in the last column of the window. If more than four burns have been performed, data for the last four burns will be presented.

To delete a burn, press **Del**. The most recent burn will be highlighted and the left/right arrow keys are used to select the burn to be deleted. Press **Del** again to delete the burn. After the burn is deleted, the column in which the data appeared is blank. The blank space can be deleted by pressing **F2**.

The deleted data can be restored by pressing **Ins**. This facility is useful if you want to determine which burn should be deleted in the set of burns.

To delete a burn for a specific element, press **Ctrl + Del** at the same time, move the highlight to the datum to be deleted and press **Del** again.

If desired, a printed report for each burn can be obtained by selecting **Printer On** on the Option drop down menu (when this selection is made, the menu will indicate **Printer Off?**), as selecting the option turns the printer off). A complete printed report (burn data, average and RSD) can be obtained by pressing **F4**.

After you have collected sufficient data for this sample, press F2. The message:

Calculating and storing standardization factors is presented at the bottom of the display. The intensity data obtained from a low concentration element in the standard (an L element) will be used to determine the appropriate offset value for the curve for that element, while the data obtained from a high concentration element in the standard (an H element) will be used to calculate the slope of the curve for that element. When the calculations are completed, the display presents a window similar to that shown in Figure 4-4 for the next standard.

This process is repeated until all standards have been burned. The number of standards to be burned is established during the setup of the alloy.

4.3.2.2 TYPE STANDARDIZATION

Type standardization involves the burning of one standard that contains the elements of interest in approximately the same concentrations as the typical sample to increase accuracy for the particular alloy type.. There are two modes for type standardization:

additive - a correction factor is added to the previously obtained slope to obtain the appropriate standardization curve. This mode is used when the concentration of the element of interest is expected to be lower than the BEC (background equivalent concentration).

multiplicative - the previously obtained slope is multiplied by a correction factor to obtain the appropriate standardization curve. This mode is used when the concentration of the element of interest is expected to be higher than the BEC (background equivalent concentration).

When Type Standardization is selected, the window appears similar to that shown in Figure 4-4, with the exception that the mode will indicate ST (Standardization Type) and the left column will indicate the element name and concentration values.

To burn a standard, place it on the sample table as described in Section 2.4.2 and press **F10**. After the burn takes place, the observed concentration for each element (line) will be presented in column labeled **Burn 1** and the number 1 will blink, indicating that this was the most recent burn.

Continue to burn this standard until sufficient data has been collected. The average and the RSD (if three or more burns are made) are presented in the last column of the window. If more than four burns have been performed, data for the last four burns will be presented.

To delete a burn, press **Del**. The most recent burn will be highlighted and the left/right arrow keys are used to select the burn to be deleted. After the burn is deleted, the column in which the data appeared is blank. The blank space can be deleted by pressing **F2**.

To delete a burn for a specific element, press **Ctrl + Del** at the same time, move the highlight to the datum to be deleted and press **Del** again.

If desired, a printed report for each burn can be obtained by selecting **Printer On** on the Option drop down menu (when this selection is made, the menu will indicate **Printer Off?**), as selecting the option turns the printer off). A complete printed report (burn data, average and RSD) can be obtained by pressing F4.

After you have collected sufficient data for this sample and want to analyze samples, press **F2**.

If type standardization is employed, the type factors are reset to their original value (0 for additive and 1 for multiplicative) when a full standardization is performed. This is because the type values are used to correct the most recent full standardization.

4.3.2.3 CHECK STANDARDIZATION

Check standardization involves the burning of a sample which was previously burned. If the system determines that the reported concentration of an element does not match the previous report (the "accepted" value), the program will prompt the operator to standardize the instrument. It is not a standardization procedure as such, rather it is a tool to be used to determine if the system should be re-standardized. This approach is frequently used as it can save time and standards.

When Check standardization is employed, the display appears similar to that shown in Figure 4-4, with the exception that the mode is indicated as SC (Standardization Check), the letter L (H) is not present and the intensity of the element is not indicated.

To burn a standard, place it on the stand as described in Section 2.4.2 and press **F10**. After the burn takes place, the observed concentration for each element line will be presented in column labeled **Burn 1** and the number 1 will blink, indicating that this was the most recent burn.

Continue to burn this standard until sufficient data has been collected. The average and RSD are presented in the last column of the window. If more than four burns have been performed, data for the last four burns will be presented.

To delete a burn, press **Del**. The most recent burn will be highlighted and the left/right arrow keys are used to select the burn to be deleted. After the burn is deleted, the column in which the data appeared is blank. The blank space can be deleted by pressing **F2**.

To delete a burn for a specific element, press **Ctrl + Del** at the same time, move the highlight to the datum to be deleted and press **Del** again.

If desired, a printed report for each burn can be obtained by selecting **Printer On** on the Option drop down menu (when this selection is made, the menu will indicate **Printer Off?**, as selecting the option turns the printer off). A complete printed report (burn data, average and RSD) can be obtained by pressing **F4**.

After you have collected sufficient data for the check sample and want to analyze samples, press **F2**. If the observed concentration is outside the selected range, the display presents the message:
check failed, activating standardization and the full standardization display is presented.

4.4 Factor Mode

Factor mode is used to display the present factor, offset and type (if applicable) for each element in the alloy. A typical display for Factor mode is presented as Figure 4-5; a display which can be used to edit the offset and factor for an element can be accessed by moving the highlight to the desired element and pressing Enter.

```
Analyze   Standardize   Edit   Transfer   Options   Quit

                                                    Time : 15:05:05
Alloy    : LAS        Mode :FC                      Date : 04-08-98

Element                Factor      Offset              Type factor

Al S                    0.97          1
Al T                    0.98        -14
As                      1.12        -15
B                       1.01       -154
Bi                      0.86        107
C                       0.97        -88                 M    1.0000
Ca                      0.76          0
Ce                      0.85        708
Co*1                    1.05        -49
Co*2                    0.99          0
Cr*1                    0.94         54
Cr*2                    0.97        -31
Cu                      1.02        -64
Mg                      1.03        -27
Mn*1                    0.94         -4                 A    0.0000

F2-Return to sample    F4-Print
                          Standardization factors
```

Figure 4-5: Factor Mode Display

NOTE: This feature is provided as an alternative to standardization of the instrument. If data is entered in this fashion, exercise extreme care to ensure that the correct values are entered. If an error is made in entering these values, significant errors in the analytical results may occur.

4.5 ELEMENT

Typically all elements are standardized. The element option on the Standardize drop down menu is used to select the elements to be standardized. For additional information, refer to Section 4.8 of the Baird Arc/Spark software manual.

CHAPTER 5 ANALYSIS OF SAMPLES

5.1 Overview

The analytical conditions, calculation of the concentration of the elements of interest and the data reporting format for an analysis is defined by the alloy, which is a collection of files that describe the various parts of the analytical procedure.

When a sample is analyzed (burned), the intensity of the emission line is used to determine the concentration of the element that corresponds to the line.

The Baird Arc/Spark Application Program is extremely flexible and provides the analyst with a very broad range of data acquisition and reporting formats. In this chapter, we will employ a typical protocol to describe the processes and displays that are used to analyze and report samples. The reader should note that it is likely that their displays will appear slightly different than that shown in this manual since the alloy is set up to meet the specific needs of each laboratory. A detailed discussion of the Baird Arc/Spark Application Program is presented in the manual describing the program (part number 084449).

The analysis display provides access to the Process Control Chart, a presentation that describes the results of a series of burns using a control standard. The Process Control Chart is described in detail in Chapter 6.

Data from the analysis of samples can be used for Charge Correction calculations. These calculations are described in Chapter 7.

5.2 Preliminary Activities

The following two activities should be performed on a daily (shift) basis before samples are burned:

The system should be aligned as described in Section 4.2.

The system should be standardized as described in Section 4.3.

During the day (shift), it may be necessary to check to ensure that the system standardization is still valid. This can be done by burning a check sample. If the results from the check sample are questionable, the instrument should be re-standardized. As the operator gains experience with the system and the analysis, it may be possible to standardize the instrument less frequently.

NOTE: The instrument must be re-standardized if you have performed the alignment procedure.

5.3 Accessing the Sample Analysis Display

The Sample Analysis display (Figure 5-1) is used to coordinate a variety of processes involving the analysis of samples and generation of analytical reports.

```
Analyze    Standardize    Edit    Transfer    Options    Quit
Sample    :                                    AU UAC   Time : 15:02:35
Alloy     : LAS        Mode :                           Date : 04-08-98
Element              Burn   1    Burn   2    Burn   3    Burn   4    Average
FeUV   (%)
F
C
S   Sample ID : SUS H5
M
P   Mode      : Concentration priority A
S
N
Mo     (%)
Cr     (%)
Ti     (%)
U      (%)
Cu     (%)
Nb     (%)
Co     (%)
↑↓-Choose    F10-Accept    Esc-Abort
```

Figure 5-1: Sample Analysis Display with Sample ID/Analysis Mode Overlay

To access the Sample Analysis display:

- Select **Run Spectrometer** on the Main Menu. The Run Spectrometer menu will be displayed.
- Select **Routine Analysis** on the Run Spectrometer Menu. A list of alloys will be displayed.
- Select the desired alloy. The monitor will display Figure 5-1.

The dialog box for the Sample ID and the Mode is overlaid on the Sample Analysis display. Enter the desired sample ID (up to 50 characters), and ensure that the Mode entry is correct.

The Mode information entry indicates the desired output format for the data for each element (e.g., intensity, intensity ratio, %) on the display. The formats are established when the alloy is set up.

To alternate between the fields in the Sample ID/Mode display, press the up arrow (↑) or down arrow (↓) key. If you want to select a different Mode, press **F2** to access the list, move the highlight to the desired entry and press **F10**.

When you have completed editing the Sample ID/Mode display, press F10 (it is not necessary to press F10 again if you edited the Mode entry).

5.4 Analyzing a Sample

After you have indicated the Sample ID and Mode (and any additional information requested by the Sample ID/Mode display), the Sample Analysis display (Figure 5-2) is presented. A detailed discussion of the various components of this display is presented in Section 3.3.

```
Analyze   Standardize   Edit   Transfer   Options   Quit

Sample    : SUS H5                                    UV VAC   Time : 15:00:22
Alloy     : LAS        Mode :PA                                Date : 04-08-98

Element                Burn   1     Burn   2     Burn   3     Burn   4     Average

FeUV   (%)
Fe**   (int)
C      (%)
Si     (%)
Mn     (%)
P      (%)
S      (%)
Ni     (%)
Mo     (%)
Cr     (%)
Ti     (%)
V      (%)
Cu     (%)
Nb     (%)
Co     (%)

F2-Next sample   F4-Print   F9-Menu   F10-Burn
                 Sample analysis
```

Figure 5-2: Sample Analysis Display

The Analysis Information display (immediately below the menu bar) presents the sample name (and any other information that was provided in the Sample ID/Mode overlay). In this figure, for example, Mode: PA indicates Concentration Priority A.

When you are ready to analyze a sample:

- Place the sample on the sample table as described in Section 2.4.2.
- Press **F10**. The sample will be burned using the analytical parameters for the alloy that has been selected. The analytical results will be displayed in the column labeled Burn 1 (Figure 5-3). If the number of elements to be determined is greater than can be conveniently displayed on the monitor, use the **Home, End,** Up arrow (↑) or Down arrow (↓) keys on the keyboard to access information about additional elements.

NOTE: When F10 is pressed to initiate a burn, the sample clamp is forced downward by argon. Make certain that there are no objects (e.g., your hand) in the vicinity of the specimen when the run is initiated.

```
Analyze    Standardize    Edit    Transfer    Options    Quit

Sample    : SUS H5                                          Time : 15:07:29
Alloy     : LAS        Mode :PA                             Date : 04-08-98

Element                Burn 1     Burn   2     Burn   3     Burn   4     Average

FeUV   (%)             92.59                                              92.59
Fe*%   (int)             39078                                              39078
C      (%)              0.5234                                             0.5234
Si     (%)              0.9975                                             0.9975
Mn     (%)              1.4423                                             1.4423
P      (%)              0.0483                                             0.0483
S      (%)              0.0293                                             0.0293
Ni     (%)              1.0630                                             1.0630
Mo     (%)              0.4291                                             0.4291
Cr     (%)              1.3193                                             1.3193
Ti     (%)              0.3333                                             0.3333
V      (%)              0.3051                                             0.3051
Cu     (%)              0.3842                                             0.3842
Nb     (%)              0.0957                                             0.0957
Co     (%)              0.0065                                             0.0065

F2-Next sample    F4-Print    F9-Menu    F10-Burn    DEL-Delete
                    Sample analysis
```

Figure 5-3: Sample Analysis Display with Burn Data

There are two general modes of data acquisition:

- The operator determines the number of burns for a sample (Section 5.4.1)
- The averageability check file function of the alloy requires that two or three burns are required (Section 5.4.2)

5.4.1 Operator Determines the Number of Burns for a Sample

When the burn is complete, the analytical results will be displayed in the column labeled burn 1 (Figure 5-3). To perform another burn, press **F10** again. The data for the next burn will be displayed in the first empty column. This process can be repeated as required until sufficient data is obtained. If the observed concentration of an element is above (below) the limits set within the alloy, the value will be highlighted via a red background and the letter H (L) will be indicated.

The average for each element will be re-calculated after each burn. If more than four burns have been made for a specimen, the left or right arrow keys on the keyboard can be used to access the data.

If three (or more) burns are collected, a display presenting the average, the standard deviation and the relative standard deviation can be obtained by selecting Standard Deviation on the Options drop down menu. A typical Standard Deviation display is shown in Figure 5-4.

```
Analyze    Standardize    Edit    Transfer    Options    Quit

Sample    : SUS H5                                          Time : 15:09:31
Alloy     : LAS        Mode :SD          of    3 burns      Date : 04-08-98

Element                Average        S.D.       R.S.D.       Minimum      Maximum

FeUV   (%)             92.67          0.068      0.1          92.59        92.71
Fe*%   (int)             39266      206.5        0.5            39078        39487
C      (%)              0.5174       0.00525    1.0            0.5141       0.5234
Si     (%)              0.9914       0.00530    0.5            0.9880       0.9975
Mn     (%)              1.4310       0.00984    0.7            1.4242       1.4423
P      (%)              0.0463       0.00181    3.9            0.0449       0.0483
S      (%)              0.0282       0.00106    3.8            0.0271       0.0293
Ni     (%)              1.0546       0.00742    0.7            1.0491       1.0630
Mo     (%)              0.4212       0.00717    1.7            0.4152       0.4291
Cr     (%)              1.3158       0.00585    0.4            1.3091       1.3193
Ti     (%)              0.3275       0.00508    1.6            0.3241       0.3333
V      (%)              0.3004       0.00419    1.4            0.2972       0.3051
Cu     (%)              0.3798       0.00381    1.0            0.3773       0.3842
Nb     (%)              0.0933       0.00221    2.4            0.0914       0.0957
Co     (%)              0.0064       0.00012    1.8            0.0063       0.0065

F2-Return to sample    F4-Print
                            Standard deviation
```

Figure 5-4: Standard Deviation Display

To delete a burn, press **Del**. The most recent burn will be highlighted and the left/right arrow keys are used to select the burn to be deleted. Press **Del** again to delete the highlighted burn. After the burn is deleted, the column in which the data appeared is blank. The blank space can be deleted by pressing **F2**.

The deleted data can be restored by pressing **Ins**. This facility is useful if you want to determine which burn should be deleted in the set of burns.

To delete a burn for a specific element, press **Ctrl + Del** at the same time, move the highlight to the datum to be deleted and press **Del** again.

When sufficient burns have been obtained, press **F2** to analyze a new sample. The Sample ID/Analysis Mode display (Figure 5-1) will be presented again.

5.4.2 Number of Burns is Defined by the Alloy

If the alloy requires that two (or three) burns must be made to determine the concentration of the elements in a sample, the bottom line of the display presents the message:

- xx burns required, make burn 2
- (where xx is 2 or 3) after the first burn.

Press **F10** to burn the sample again. Data from additional burns are presented in the column labeled **Burn 2** (3). If the observed concentration of an element is above (below) the limits set within the alloy, the value will be highlighted via a red background and the letter H (L) will be indicated.

When the appropriate number of burns have been made, the message on the bottom of the display presents **Average Test Passed** if the average value is within the limits set within the alloy.

If the average value is outside the limits, the operator will be prompted to make another burn. After the additional burn is made, the outlying value will be automatically rejected and the average will be re-calculated.

To burn the next sample, press **F2**. The display will present the Sample ID/Analysis Mode overlay again.

5.5 Printing/Storage/Export of the Analytical Data

The Baird Arc/Spark application program provides the operator with a very broad range of capabilities for the storage of data, printing of reports and exporting of data to a remote device. These range from a simple printout of the data from each burn to the generation of a formal report.

The desired output format can be indicated via the alloy, and the operator is referred to the Baird Arc/Spark Software Manual for details on setting up the desired functions. In this section, we will focus on those functions which are available to the operator during a routine analysis.

F4 presents a printed report which includes the Sample ID (and related information which was indicated with the Sample ID/Analysis Mode), the data for each burn and the average for each element.

Analysis Report (on the Options drop down menu) presents a printed report that is formatted as described by the Analysis Report part of the alloy.

Printer On? (on the Options drop down menu) is used to indicate that the data from each burn should be printed as soon as it is collected. When the operator wants data from each burn to be printed, the Options drop down menu will indicate **Printer Off?** to indicate that the operator should select that entry to turn the printer off.

Printer (on the Transfer drop down menu) generates a printed report which includes the Sample ID (and related information which was indicated with the Sample ID/Analysis Mode). The average for each element (but not the individual burn data) is included in this report.

Remote (on the Transfer drop down menu) sends a report which includes the Sample ID (and related information which was indicated with the Sample ID/Analysis Mode) to a remote printer (or other device). The average for each element (but not the individual burn data) is included in this report.

File (on the Transfer drop down menu) saves a report which includes the Sample ID and related information which was indicated with the Sample ID/Analysis Mode. The average for each element is included in this report (but not the individual burn data). The data can be used with the features of the View Stored Data routines (for additional information, refer to Chapter 14 of the Baird Arc/Spark Software Manual).

If the sample average should be transmitted to a remote device, should be printed or should be stored, the alloy can be programmed to provide a warning to the operator that the average has not been transmitted. This warning is presented when F2 - Next Sample is pressed.

If the alloy includes such a warning, the indicator [T], [P] or [S] will appear on the bottom right of the display to indicate that the alloy requires that the data be transmitted, printed or stored. The flag(s) will appear after the first burn (last burn, if the averageability feature is employed).

CHAPTER 6 STATISTICAL PROCESS CONTROL CHART

6.1 Overview

In statistical process control, a control standard is burned on a periodic basis (e.g., every 12 hours). The observed concentration and the standard deviation are plotted to generate the Statistical Process Control chart, which includes the allowable limits for the concentration and the standard deviation of each element.

The role of statistical process control is to determine if the observed variations in the measurement of the concentration of an element in a sample is due to random fluctuations or due to a determinate cause. A major benefit of the technique is that it provides an objective mathematical evaluation of the data (as opposed to the subjective evaluation that might be made by the operator).

A detailed description of how a Statistical Process Control Chart is generated is presented in Section 5.5 of the Baird Arc/Spark Software Manual (part number 084449). In this chapter, we describe how the chart is used on a routine basis by the operator.

6.2 Statistical Process Control Chart

A typical Statistical Process Control Chart is presented in Figure 6-1. A point is added to the plot whenever the control standard is burned. The horizontal bars in the AVERAGE region represent the "acceptable" range for the average, while the horizontal bar in the STD. DEV represents the maximum standard deviation that is acceptable.

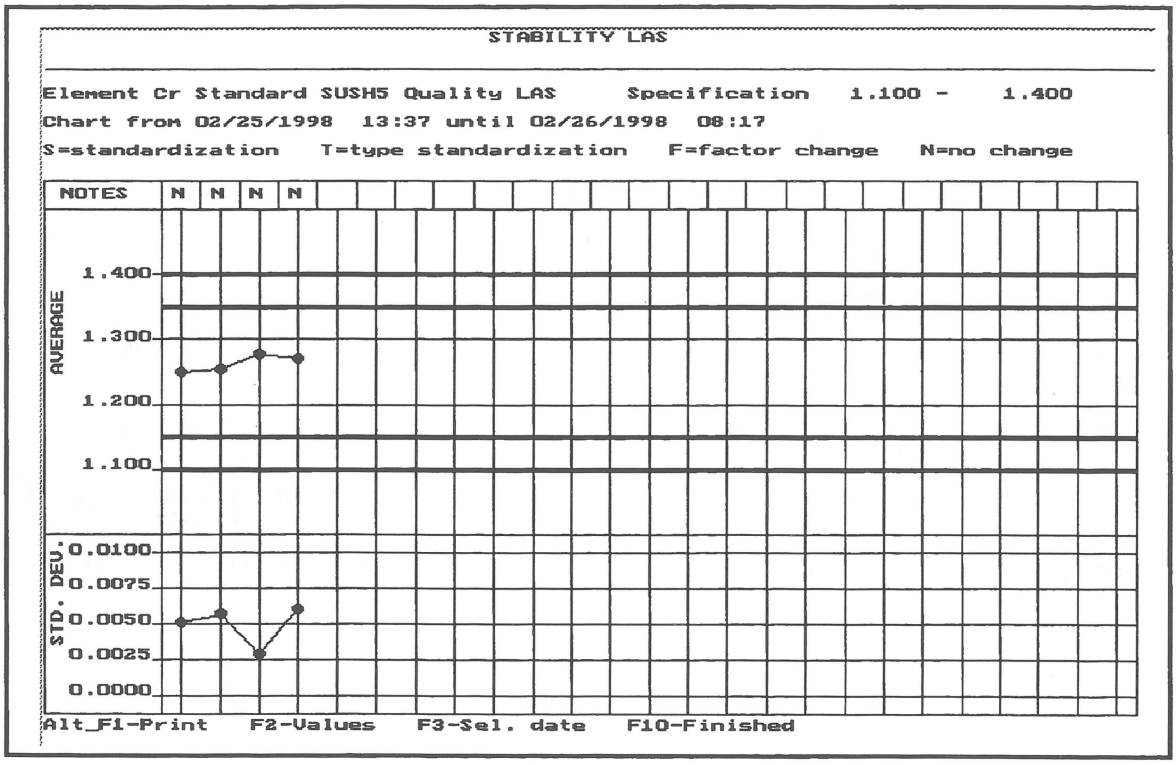

Figure 6-1: Statistical Process Control Chart

6.3 Accessing the Statistical Process Program

To access the Statistical Process Control Chart program, select **Process control chart** on the Option drop down menu of the Sample analysis display. The display will present the menu shown in Figure 6-2.

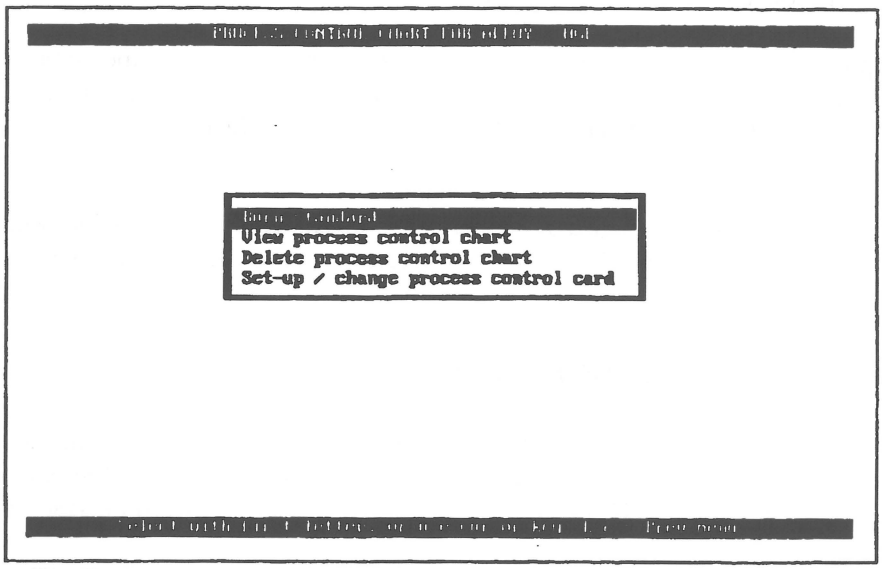

Figure 6-2: Process Control Chart Menu

If you want to burn a standard, select **Burn standard** (Section 6.3.1).

If you want to view the chart for a given element, select **View process control chart** (Section 6.3.2).

6.3.1 Burning a Control Standard

When **Burn standard** is selected, the burn control standard display (Figure 6-3) is presented. The general layout of the display is similar to the analysis window.

PROCESS CONTROL CHART FOR ALLOY : LAS

Burn standard : sus h5 | Time : 15:11:08
LAS Mode :CC | Date : 04-08-98

Element		Burn 1	Burn 2	Burn 3	Burn 4	Average
FeUV	(%)	92.74				92.74
C	(%)	0.5025				0.5025
Si	(%)	0.9875				0.9875
Mn	(%)	1.4353				1.4353
P	(%)	0.0424				0.0424
S	(%)	0.0242				0.0242
Ni	(%)	1.0424				1.0424
Mo	(%)	0.4080				0.4080
Cr	(%)	1.3165				1.3165
Ti	(%)	0.3158				0.3158
V	(%)	0.2968				0.2968
Cu	(%)	0.3755				0.3755
Nb	(%)	0.0894				0.0894
Co	(%)	0.0065				0.0065
W	(%)	0.0177				0.0177

F4-Print F9-Finished F10-Burn DEL-Delete

Figure 6-3: Burn Control Standard Display

Place the standard on the sample table as described in Section 2.4.2 and press **F10**. The standard will be burned and the data will be presented in the display in the column labeled Burn 1. The requisite number of burns is established when the chart is set up.

When you have completed the appropriate number of burns, press **F9**. The display will include an overlay as shown in Figure 6-4. The remark field is used to indicate the type of standardization that was used. The letter corresponding to the type of standardization should be entered. When the information is complete, press **F10** to accept the data.

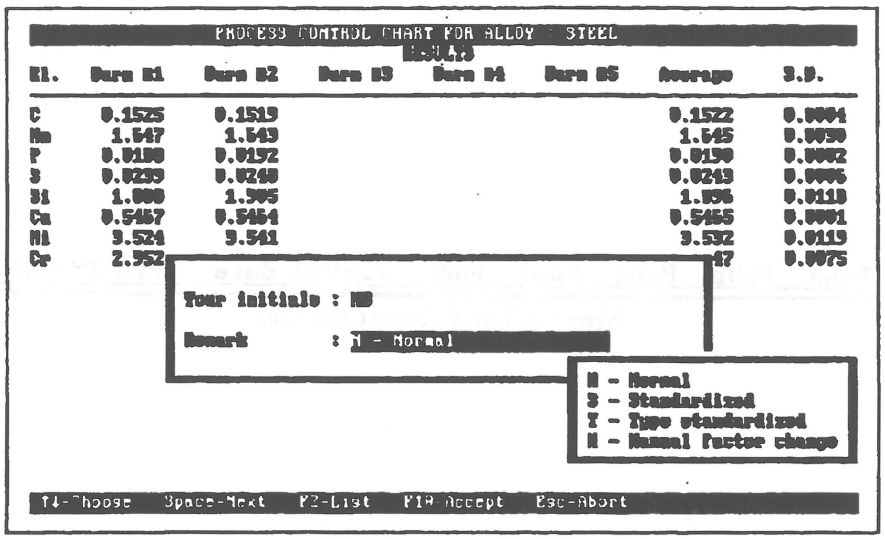

Figure 6-4: Initials and Remark Overlay on the Summary Display

6.3.2 Viewing a Statistical Process Control Chart

To view a Statistical Process Control Chart, press **View process control chart** on the menu shown in Figure 6-2. The display will present a list of the elements for which a table exists. When you have chosen the desired element, the display will present a chart similar to that shown in Figure 6-1.

To view the analytical data used to construct the chart, press **F2**. A typical set of data is shown in Figure 6-5. The up arrow (↑), down arrow (↓), **PgUp, PgDn, Home** and **End** keys can be used to move within the table.

If **F3** - Sel date is selected, a display will be presented in which the operator can enter the date/time for which data is desired. When the desired date and time are indicated, the listing will begin with the data from that point and present only data from that point forward.

PROCESS CONTROL CHART FOR ALLOY : LAS
Low Alloyed Steel PCC

Element C Standard sus h5 Quality LAS Specification 0.4500 - 0.5500
Chart from 04/08/1998 10:07 until 04/08/1998 15:12
S=standardization T=type standardization F=factor change N=no change

Date	Time	Remark	#1	#2	#3	#4	#5	Average	S.D.
04/08/1998	10:07	N JCS	0.5010	0.5015				0.5012	0.0003
04/08/1998	10:21	N JCS	0.5079	0.5064				0.5072	0.0010
04/08/1998	11:00	T JCS	0.5114	0.5093				0.5104	0.0015
04/08/1998	11:08	T JCS	0.5185	0.5190				0.5187	0.0003
04/08/1998	15:12	N JCS	0.5025	0.5005				0.5015	0.0013

Up Down PgUp PgDn Home End F3-Sel date F10-Finished

Figure 6-5: Typical Control Chart Data

CHAPTER 7 CHARGE CALCULATION/MELT CORRECTION PROGRAM

7.1 Overview

Typically, a foundry is required to prepare an alloy of a specific chemical composition using a variety of stock materials. In this situation, the operator needs to know how much of each of the various available stock materials should be placed in the furnace to generate the desired alloy at the lowest cost. There are two general situations to consider:

What quantity of the various stock materials should be employed in the initial charge? Once the initial charge has melted, the composition of the material in the furnace (the melt) is determined by the FoundryMate. At this point, the operator needs to know how much of the various stock materials need to be added to bring the chemical composition of the melt within specification.

The Charge Calculation/Melt Correction program (which is also called the Charge and Melt Additions program or the Economelt program) is designed to indicate the materials to be placed in or added to the furnace in each of the above cases. A simplex least cost algorithm is employed in the program to determine the amount of each of the available stock materials that should be used or added to create the desired alloy at minimum cost.

In this discussion, it is assumed that the specifications for the alloy to be made in the furnace (the quality), the materials specifications files which describe each of the stock materials (including the cost and the inventory), the furnace data, and related files have been established as described in the Baird Economelt Charge Calculation/Correction Software Operating Procedures Manual (part number 080104).

The Charge Calculation/Melt Correction program can be accessed from:

- The Main Menu - this approach is used when the operator wants to determine the initial (set-up) charge.
- The Options drop down menu on the analysis screen when the Run Spectrometer display is active (e.g., Figure 5-3) - this approach is used when the operator wants to determine the stock materials that should be added to correct the present composition of the melt.

7.2 Determining the Initial Charge

To determine the initial charge:

Select **Charge Correction** on the Main Menu. The display will present the Charge Correction program title page. When you press any key, the Charge Correction Main Menu will be presented.

Select **Least Cost Charge Calculations**. The display will present a list of the existing alloy files. When you select the desired file, the specification of that alloy will be presented (e.g., Figure 7-1). If you want to include the concentration of each element in the alloy, press N, then press **Enter**.

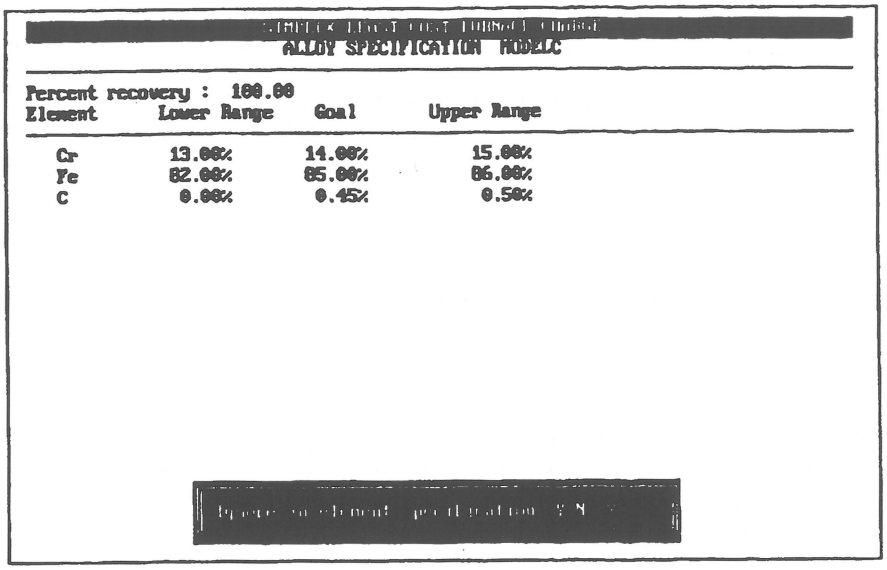

Figure 7-1: Specification File for an Alloy

The **Furnace Charge** display (Figure 7-2) will be presented. Select **End Weight**, enter the desired weight of the alloy and press **F10**.

The monitor will present a list of the stock materials that could be used to charge the furnace. To indicate that a stock material should be used, use the arrow keys on the keyboard to select the material (the selected stock material will be blinking) and press **Enter**. When each of the desired stock materials has been selected, press **F10**.

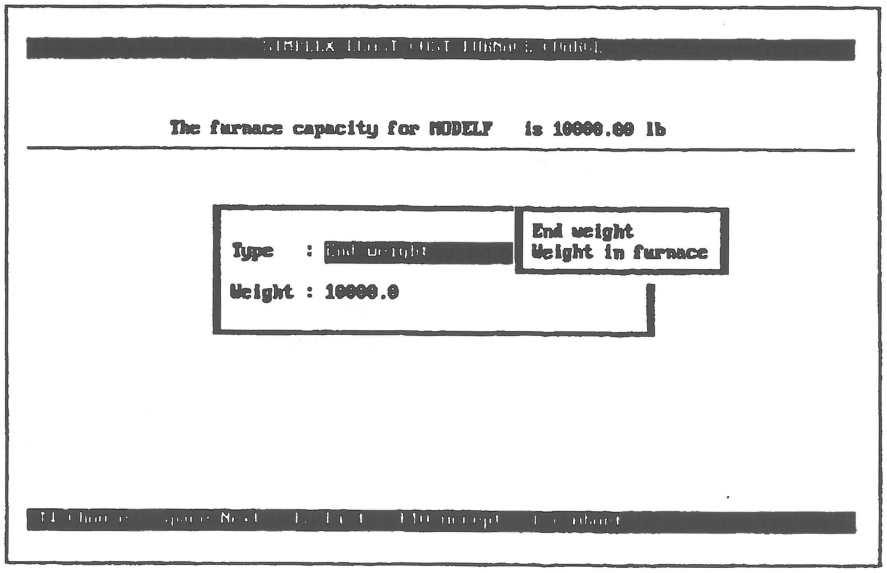

Figure 7-2: Furnace Charge Display

The **Change Use For Materials** display (Figure 7-3) will be presented. If the information in the Maximum and Minimum use columns is acceptable, press **F10**. The maximum use is based on the available inventory (unless the unlimited option was selected when the stock material file was set up). To access the display to edit, highlight the desired line and press **Enter**.

CHANGE USE FOR MATERIALS

Material	Description	Maximum use lb	Minimum use lb	Price $US/lb
MODELHC	High C Ferrochrome	[illegible]		[illegible]
MODELLC	Low C Ferrochrome	17675.00	—	3.00
MODELSC	Scrap Steel	10000.00	—	0.10

Figure 7-3: Change Use for Materials Display

NOTE: In some situations, an inventory of each stock material is maintained by the system. The initial quantity of a stock material is indicated when the file describing the material is established. The quantity of stock material in inventory is reduced by the program when stock material is used. The inventory can be increased by the operator on a manual basis when additional stock material is obtained.

If the inventory is maintained by the computer, the maximum use column will indicate the present inventory (unless a lower quantity has been indicated for the maximum use).

At this point, the display will summarize the Alloy Specification, the Furnace Name, Furnace Capacity and the charge weight. The operator will be prompted to indicate the charge name. When the charge name is selected, the computer will determine the amount of the various stock materials that should be placed in the furnace used, as well as the cost of the charge (Figure 7-4).

FINAL SPECIFICATION

Charge : FAN_96

Bill of Materials for furnace MODELF

Name	Material description	Location	Lot	Cost $US	Addition lb
MODELHC	High C Ferrichrome	Bin 96	463	744.44	744.44
MODELLC	Low C Ferrochrome	Bin 21	41	1966.67	655.56
MODELSC	Scrap Steel	Bin 3	765	360.00	3600.00
			Total	3071.11	5000.00

Figure 7-4: Final Specification Display

When any key is pressed, the display will present the expected concentration of each element of interest in the alloy after the stock materials have been determined and ask if the stock materials inventory should be updated. If the inventory is updated, you can view the updated inventory for a stock material via the Display/Change Stock Materials entry on the Main Menu.

7.3 Determining the Materials to be Added to a Melt

Once the furnace has been charged, the operator may want to determine the composition of the alloy and determine the amount of stock materials that should be added to obtain the desired composition.

To determine the materials that must be added to the melt:

- Burn a sample in the normal fashion as described in Chapter 5.
- Select **Charge Correction** on the Options drop down menu. The display will present a summary of the charge to be corrected (including the Alloy Specification name, the furnace name, the capacity of the furnace and the charge weight) and will request that the operator enter the charge name.
- When the charge name is entered, the display presents the stock material list that should be added. The display will appear similar to that shown in Figure 7-4. When a key is pressed, the expected end concentration is presented. If desired, the inventory can be updated.

CHAPTER 8 MAINTENANCE

8.1 Overview

The FoundryMate is designed to minimize the maintenance activities that need to be performed by the operator. The indicated frequency for each activity is based on typical usage of the instrument; it is possible that the operator will determine that activities can be done less frequently or more frequently, depending on the use of the instrument and the type of sample that is analyzed.

8.2 Daily Maintenance

The daily maintenance activities are indicated in Section 2.3 and are incorporated by reference to that section. It may be necessary to perform these activities on a shift basis, depending on the nature of the samples that are analyzed.

8.3 Weekly Maintenance

On a weekly basis:

- The analytical stand should be thoroughly cleaned (Section 8.3.1).
- The argon gas exhaust system should be inspected (Section 8.3.2).

After cleaning the analytical stand and checking the gas flow, make certain that the instrument is standardized.

8.3.1 Clean the Analytical Stand

A detailed view of the analytical stand is presented in Figure 8-1:

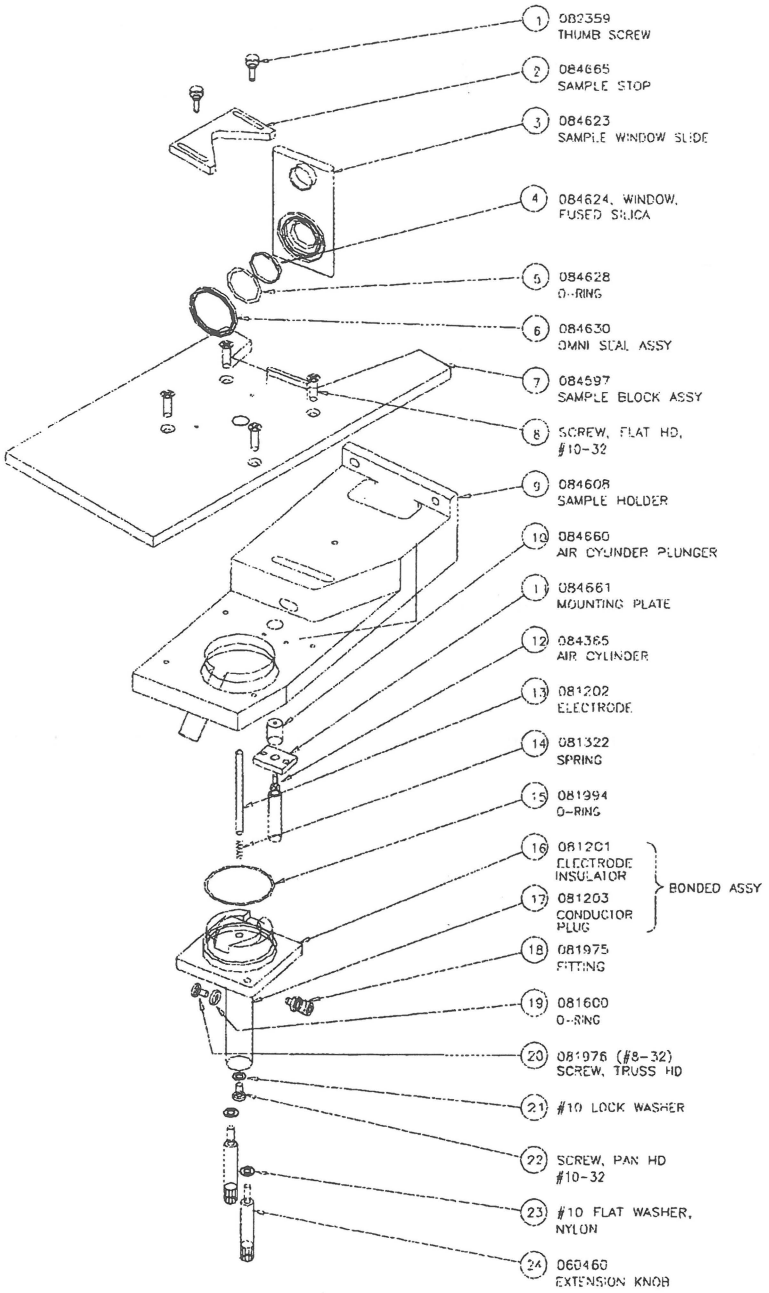

Figure 8-1: Exploded View of Analytical Stand

To clean the analytical stand:

1. Open the door on the lower left corner of the unit.
2. Remove the two knurled screws (extension knob) on the bottom of the stand.
3. Thoroughly clean the excitation chamber using a dry laboratory tissue (e.g., a Kimwipe™). Do not use solvents or detergents.

4. Reassemble the components. Make certain that all surfaces that constitute the cavity seal are free of particles that could cause argon leakage.

8.3.2 Check the Argon Gas Exhaust System

The argon gas exhaust system (Figure 8-2) includes a filter trap that is used to ensure that hazardous materials do not escape into the environment. A change in the level of the gas entry tube in the liquid trap or blockage of the tubing, may create a change in the back pressure in the excitation chamber; thereby causing a change in the excitation conditions.

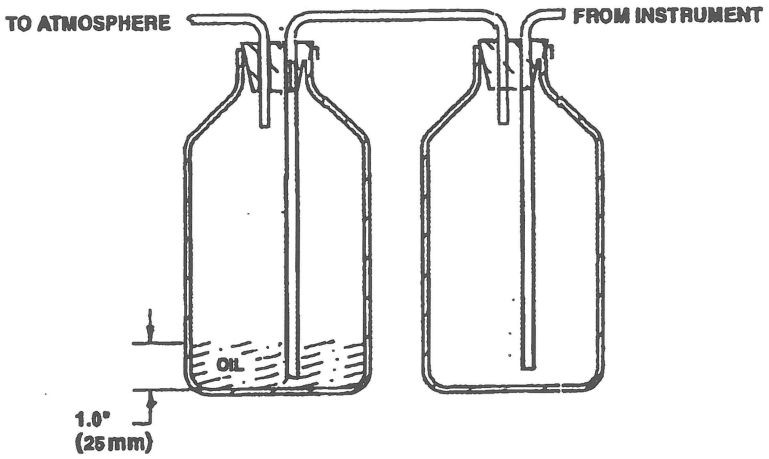

Figure 8-2: Argon Filter Trap

To check the argon gas exhaust system:

1. Open the large door on the front of the instrument and monitor the gas flow on the flow gauge. The flow rate should be approximately 2 SCFH (1 L/min) while the system is between sample measurements. During analyses, the gas flow is 12 SCFH (5.8 L/min). A change in pressure is an indication that some condition in the instrument has changed.
2. Check the level of the oil in the liquid trap. A decrease in the oil level may create a decrease in the back pressure in the excitation chamber and might change the excitation conditions.

   NOTE: If necessary, add oil so that the level is 1" (25 mm) above the bottom of the bottle. The bottle is marked to indicate the 1" (25 mm) level.

3. Check the tubing from the analytical stand to the trap and the tubing between the two traps for blockage. Partial blockage of the tubing may lead to an increase in the back pressure which might change the excitation conditions. Blockage may also occur in the outlet from the stand. Clean this tube with a brush after removing the tygon tubing.

Another indication of improper back pressure is a milky white looking burn on the surface of the sample. (Milky burns may also occur due to leaks in the argon supply line or a poor quality of argon).

NOTE: When disposing of the residue in the "dry" trap, submerge the powder collected in the dry bottle into a container of water or vacuum pump oil. Avoid creating sparks as some materials may ignite. Do not dispose of the residue in an empty waste basket.

When disposing of the oil in the second bottle, do so in an environmentally safe way, consistent with local regulations.

CHAPTER 9 TROUBLESHOOTING/ADJUSTMENT AND REPAIR

9.1 Overview

This chapter provides:

- Troubleshooting information for the Foundrymate
- Information about the adjustment and replacement of a number of components of the analytical stand

9.2 Troubleshooting

Troubleshooting is referred to as the determination of the reason for an abnormal response from the instrument. It should be recalled that in almost all situations, there is one and only one probable cause for the problem. In this chapter, we will describe a number of possible problems, indicate possible causes for each situation and provide information to resolve the problem.

This discussion presents troubleshooting activities in two general approaches:

- The system provides abnormal analytical results (the analysis of a standard indicates unexpected or incorrect results for some or all elements).
- The system (or a component of the system) appears to function abnormally.

If you need assistance in resolving a problem, please call your local Baird service representative.

9.3 Preliminary Troubleshooting Activities

When a problem is observed, the operator should perform the daily maintenance activities described below as a first step:

1. Check the condition of the counter electrode. The counter electrode should be clean and the gap set as described in Sections 2.3.4 and 2.3.5.
2. Perform the alignment procedure described in Section 4.2.
3. Standardize the system (or run a check sample) as described in Section 4.3.

9.4 Causes of Abnormal Analytical Results

9.4.1 Problems that Affect all Elements

Probable Cause	Suggested Action
Source is not operating properly	Check condition of counter electrode (Sections 2.3.4, 2.3.5).
	Argon flow inadequate (Green LED will be off)
	Sample does not cover stand hole completely (Green LED will be off)
Alignment dial is set to wrong position	Realign the unit using the optical alignment procedure (Section 4.2).
Argon flow is too low (milky burn spot)	Check argon flow (Section 9.5.1).
	Check argon pressure and replace tank if necessary.
Reference element is not present in the sample	Check to ensure that the sample is the correct matrix.
Measuring conditions are not properly set	Verify measuring conditions.
Sample not loaded properly	Re-load sample (Sample 2.4.2)
Damaged sample table (e.g., deep scratches)	Replace sample table (Section 9.5.1)
	Baird service personnel should be contacted
Electrode gap improperly set	Clean and regap the electrode (Section 2.3.5)

9.4.2 Problems that Affect only a Few Elements

Probable Cause	Suggested Action
Wrong standard used or wrong type of type standardization is employed	Re-standardize system using correct standard. If type standardization is used, ensure that correct format is employed (See Section 4.3.2.2).
Wrong type of alloy file was used	Run the control standard.

9.4.3 Low Intensity

Probable Cause	Suggested Action
Reference element concentration is not present at the expected concentration	Check reference element concentration.
Wrong sample was measured	Verify that the correct sample was analyzed.

NOTE: If you are working in concentration mode, a decrease in the intensity of the lines may lead to an increase in the reported concentration. This effect would be observed if the reference line was abnormally low.

9.5 Abnormal Operating Conditions

9.5.1 Abnormal Gas Flow

If the excitation source operates; but an abnormal sound is heard, or if the burn spot is milky white, it is possible that the argon flow is not set properly. It should be set at 2 SCFH (1 L/min) between sample measurements and 12 SCFM (5.8 L/min) during analysis.

The following actions are suggested:

- Check to ensure that the argon supply is properly set.
- Check for leaks in the gas line to the system.
- Check for blockage in tubing, argon tubing connections, exhaust line and trap.
- The flow meter on the gas control panel may be improperly set.
- Ensure that the argon gas supply meets the specifications required for the system. If necessary, obtain an alternative supply of argon.

9.5.2 Absence of a Spark

If the source does not operate (i.e., no spark is observed):

- Check the condition of all circuit breakers and fuses.
- Ensure that all electrical connections are secure.
- Check to see if green LED is on.

9.5.3 Erratic Operation of the Source

If the source operates but makes an extremely loud and erratic buzzing sound:

- Ensure that there is a sample on the specimen mounting block and that it completely covers the opening.
- Ensure that the argon gas flow is turned on and there are no leaks.
- Check to see if the sample is flat.
- The sample table may need replacement.

9.6 Replacing Components of the System

The FoundryMate is designed to minimize the need to replace components during routine operation. The frequency of changing of these components is dependent on the use of the instrument and the type of samples that are analyzed.

Over a period of time, it may be necessary to replace a number of items in the analytical stand such as the tungsten counter electrode (part number 081202), the O-ring (part number 081994) and the Micalex insulator (part number 081201). These components are located in the analytical stand (Figure 9-1).

The position of the tungsten electrode is fixed by the set screw (part number 081976). When the electrode is replaced, ensure that the gap is set as described in Section 2.3.5).

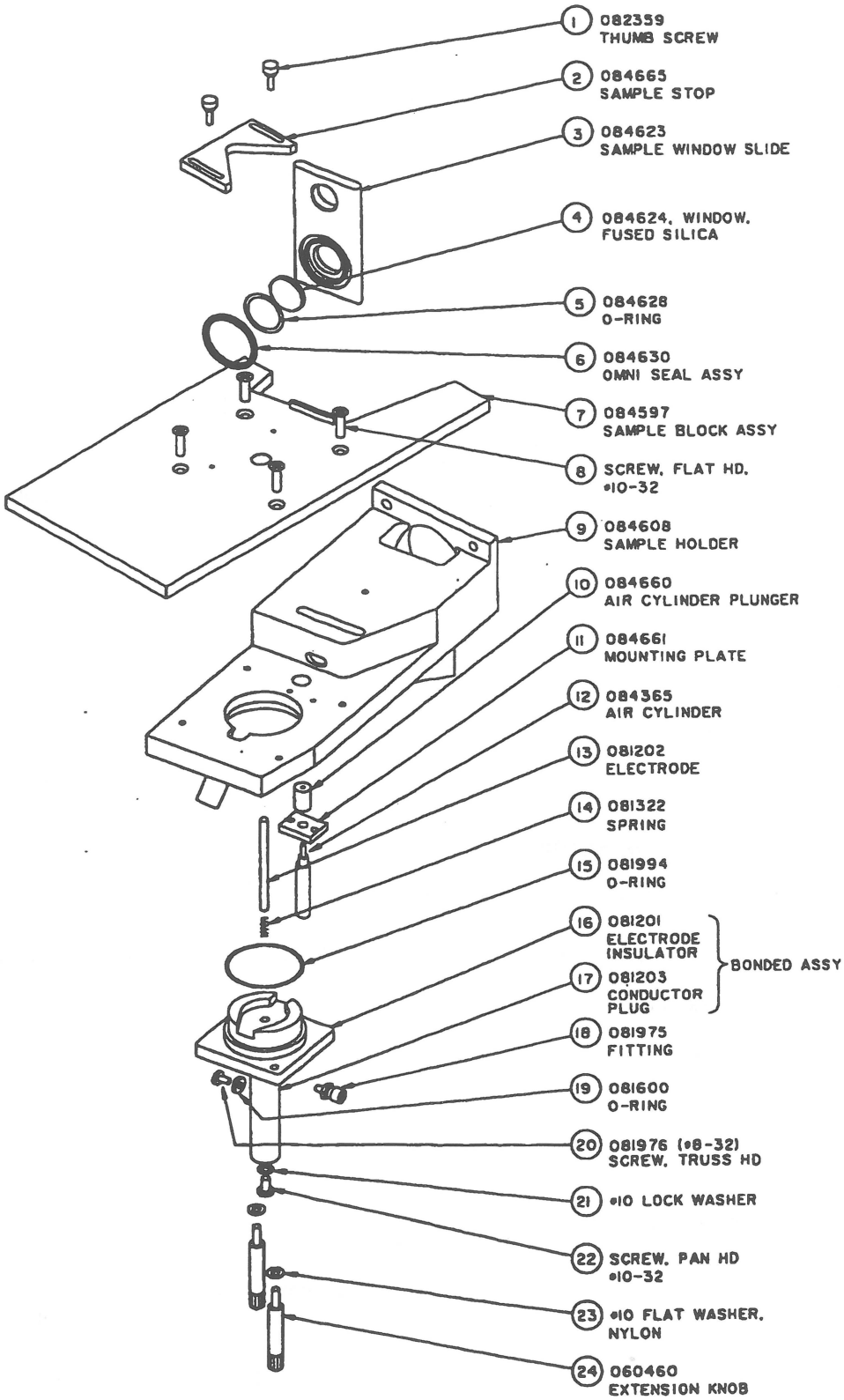

Figure 9-1: Analytical Stand

CHAPTER 10 REMOTE GUN OPERATION

10. 1 OVERVIEW

The remote gun is an optional sparking device, which allows analysis of large and irregular samples. The gun assembly consists of controls, a sparking chamber, an optical device, and a fan. The gun is connected to the source unit, interface and optics. A 3-meter long umbilical cord contains high voltage cables, control wires, fiber optic, argon gas tubing, and air tubing. The gun assembly has a trigger button to initiate sparking, a safety button to enable sparking, and two buttons to select functions.

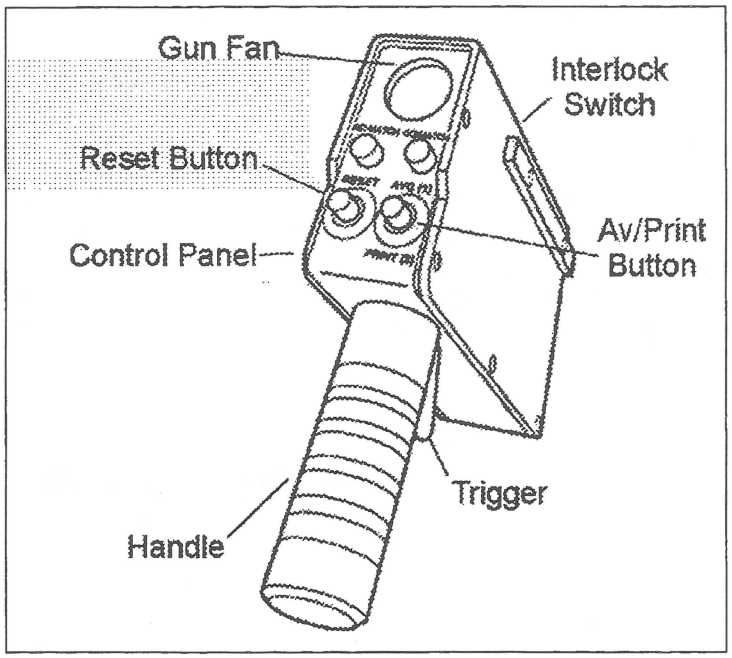

Figure 10-1: Remote Gun Assembly

In order to spark a sample, the safety button must be pressed down during the analysis period. It also prevents any unintentional sparking. Also, the sample must be securely pressed against the gun barrel in order to obtain reliable results. For safety precautions, wear the provided insulated gloves to hold the spark gun and do not touch the sample during analysis. Please refer to the "FoundryMate Safety Guide p/n 140490-00" for additional safety information.

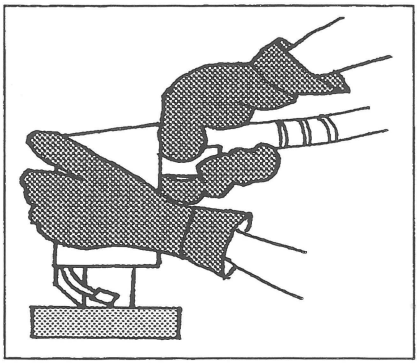

Figure 10-2: Proper Handling of Remote Gun

10. 2 GUN OPERATION MODE

To change operation from sample stand to gun, the electrical power and argon gas switches must be deactivated to select the gun operation mode.

10.2.1. POWER SELECTOR SWITCH

The selector switch directs the electrical power to the spark stand or to the remote gun. Turn off both main electrical power switches to the FoundryMate, then open the sample stand access door. Pull the selector block out and reverse the position. Be sure that the label "Gun" is pointing up.

10.2.2. ARGON GAS SWITCH

The toggle switch located next to the selector block must be open to supply argon gas to the remote gun. The argon flow is preset at the factory, however, it can be readjusted if required. The argon flow meter and adjustment valve are located adjacent to the primary argon control panel behind of the front door in the main cabinet. A flow rate of approximately 10 SCFH is required. This argon flow will be on all the time material is being analyzed using the gun. At the end of gun operation the gas should be turned off.

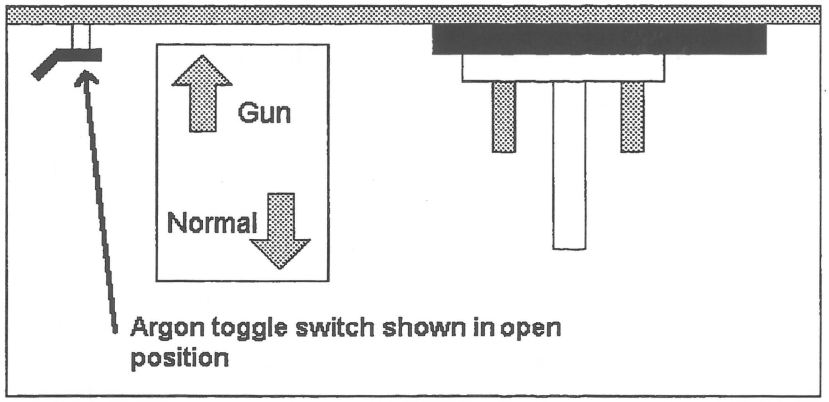

Figure 10-3: Switching from Stand to Gun

10. 3 SAMPLES ANALYSIS

In the remote gun operation, Material Check, Grade Identification, and Quantitative Analysis are available using the Baird A/S software package.

10.3.1 MATERIAL CHECK

This program allows the sorting of materials by determining whether samples match required specifications.
A "known " reference sample is used to obtain the intensities for the elements which define the material. Tolerance values are then set for each of these elements. Then, when an "unknown" sample is measured, the program will determine whether the sample meets the specification. A display on the screen of "GO" indicates samples that match and "NO GO" for those that do not.
From the Main menu of Baird A/S Program, select "Material Sorting Program".

```
MAIN MENU

Run spectrometer
Change configuration
View stored data
Charge correction
Materials Sorting Program
Exit to DOS

Select with first letter, or use cursor keys
```

Figure 10-4: Baird A/S Main Menu

From the Material Sorting Program menu, select "Material Check".

```
MATERIAL SORTING MENU

MATERIAL CHECK
GRADE ID
EXIT

Select with arrow keys, then use <ENTER>
```

Figure 10-5: Material Sorting Menu

10.3.1.1 FILE SELECTION

A material file must be created for initial setup. A file name can be alphanumeric up to eight characters.

```
                    MATERIAL CHECK

MAT-001


   Select with first letter, or use cursor keys <ESC> - Prev menu
```

Figure 10-6: Material File Selection Menu

If materials files have already been created, a file can be selected for editing and utilized for material identification.

```
              CHECKING MATERIAL : MAT-001

              GO / NO GO test
              Measure Reference Material
              Setup Sorting Material
              Return to Material Sorting Menu

         Select with arrow keys, then use <ENTER>
```

Figure 10-7: Checking Material Menu

10.3.1.2 SETUP SORTING MATERIAL

Select a file or create a new file name from the 'Display/Setup Sorting Material' menu.

10.3.1.3 BURN PARAMETERS

Select "Burn Parameters". Enter sparking conditions for preburn and exposure cycles. Then enter timing for flush, preburn and exposure. Internal standard must be assigned with appropriate matrix element, i.e., Fe for ferrous base, Al for aluminum base. When all parameters are completed, accept the information to exit the Burn Parameter screen.

```
CHANGING MATERIAL SPECIFICATION : MAT-001

        Change burn parameters

                ACCEPT

Preburn parameter #1     : NO
Preburn parameter #2     : NO
Preburn parameter #3     : NO

Expose  parameter #1     : NO
Expose  parameter #2     : NO
Expose  parameter #3     : NO

Flush   time             :  1 sec
Preburn time             :  2 sec
Expose  time             :  2 sec

Continuous argon flush   : NO

Internal standard        : NONE

Select with arrow keys, then use <ENTER>
```

Figure 10-8: Burn Parameter Menu

10.3.1.4 Material Specification

All available analytical lines are displayed on the Material Specification screen. Select the elements of interest and define asymmetric tolerance values. Low % is the low tolerance value and High % is the high tolerance value. The tolerance values are displayed on the left side of the screen and can be changed for different materials. The internal standard element must be selected to measure the matrix element intensity. If any element has a residual concentration level, or does not contribute to differentiate the particular material from others, the element should not be selected.

Some elements require two channels to cover a broad concentration range. For example, a nickel concentration range can go from trace levels to 35% in various alloys in ferrous base material. In order to cover the wide concentration range, two different spectrum lines are used, a sensitive line to measure low concentrations and a less sensitive line to measure high concentrations. If a material contains high nickel concentrations, such as some stainless steels, the less sensitive nickel line must be selected.

For the initial setup of the "Creating Material Specification" table, the Original Values will not be available. When the calibration is completed, the Original Values will be automatically inserted for all assigned elements. When the specification is re-edited after measuring a reference material, the elements can be deleted or inserted. The original values are automatically retrieved and displayed correctly.

```
                    CREATING MATERIAL SPECIFICATION : T-167

 TOLERANCES
     5   %
    10          h %     Org_val      Elmt   Low %  High %     Org_val
    15
    20                          ACCEPT
    25
    30                                B
    35                                C
    40                                Co*2      10       15
    45                                Cr*2      15       15
    50                 Changing element : Cu*1
    60                                                    20
    70                        ACCEPT
    80                                                    20
    90                 Low  tolerance present  : YES      15
   100                                                    20
   120                 Low  tolerance value    :   20 %
   140
   160              2  High tolerance present  : YES
   180                                                    15
   200              2  High tolerance value    :   20 %

                 Select with arrow keys, then use <ENTER>
```

Figure 10-9: Material Specification Table

10.3.1.5 Measuring Reference Material

Prepare the reference material for sparking. Select "Measure Reference Material" from the Checking Material menu. The screen displays the material name at the top and required elements on the left of the screen. For the initial calibration, the message "This material has never been calibrated, first burn reference material." will be displayed. Measure the reference material at least 3 or 4 times. The running averages are calculated and displayed at the right side of the screen.

```
                    CHECKING MATERIAL : MAT-001
                              CALIBRATE

Elmt        Burn #1      Burn #2      Burn #3      Burn #4      Average
Cr*1          21010        20739        20675        20676        20775
Cu*1           6810         7039         7071         7125         7011
Fe*R          27063        25744        25838        25895        26135
Mn*1          18930        18917        19046        18907        18950
Mo             9404         9544         9529         9542         9505
Nb             4704         4859         4873         4835         4818
Ni*1          15183        15689        15624        15953        15612
Si*1           4464         4630         4640         4657         4598
V              4349         4502         4505         4483         4460
Fe*R REF      27063        25744        25838        25895        26135

Press trigger to start, <RESET> + <AV/PRINT> = RESET, <AV/PRINT> = MENU
```

Figure 10-10: Calibrate Reference Menu

When the measurements are completed, press the <AV/PRINT> button on the gun to enter menu. The new menu at the bottom of the screen now indicates selections that can be made, namely, accept all data, or delete bad burns.

10.3.1.6 GO / NO GO TEST

The program is now ready for measuring samples to sort materials. From the Checking Material menu, select "GO/NO GO Test".

```
CHECKING MATERIAL : MAT-001

GO / NO GO test
Measure Reference Material
Setup Sorting Material
Return to Material Sorting Menu

Select with arrow keys, then use <ENTER>
```

Figure 10-11: Checking Material Menu

Prepare the samples and make analytical measurements. After a single burn, the screen displays "GO", if a sample matches the reference material, otherwise a "NO GO" display appears. If a sample does not pass, the failing elements are displayed on the screen as "Elements too low" and "Elements too high".

The program will display the total number of samples, and the number of rejected samples at the bottom of the screen.

Press the <RESET> button on the gun to continue the operation for additional samples. When all samples are measured, press the <RESET> and <AV/PRINT> buttons at the same time to return to the Checking Material menu.

```
NO   GO

PRESS RESET TO CONTINUE

Elements too low  :        Ni*1
Elements too high :        Cr*1Mo  Si*1V  Nb

BURN      #        6
REJECTS   #        2
```

Figure 10-12: GO / NO GO Test Display

10.3.2. GRADE IDENTIFICATION

This program will identify the material type. The type can be the grade, the alloy, or any designation distinguishing a group of materials. First, measure the required reference materials to obtain the intensities for the elements of interest. Based on the defined specifications and obtained intensities, an unknown sample is checked to see if it matches any of the registered reference materials. The program will indicate the identified grade, alloy or material if there is a match.

From the Material Sorting Program, select "Grade ID" from Material Sorting Menu.

```
MATERIAL SORTING MENU

MATERIAL CHECK
GRADE ID
EXIT

Select with arrow keys, then use <ENTER>
```

Figure 10-13: Material Sorting Menu

For initial setup, a material file must be created by selecting "Make new file" from the Material Sorting Menu. A file name can be alphanumeric up to eight characters. If material files have already been created, a file can be selected for editing and utilized for grade identification.

```
                    MATERIAL SORTING MENU

Make new file     G1          GUN          GUNT          TEST


     Select with first letter, or use cursor keys <ESC> - Prev menu
```

Figure 10-14: Grade ID File Selection

```
GRADE IDENTIFICATION GRADESET : TEST

Identify Materials
Identify with Analysis Report
Standardize
Measure Reference Material
SETUP Grade ID
Return to Material Sorting Menu

Select with arrow keys, then use <ENTER>
```

Figure 10-15: Grade Identification Menu

From the SETUP Grade Identification Menu, the following file setup functions are available.

```
SETUP GRADE IDENTIFICATION GRADESET : TEST

Standardization
Burn Parameters
Grade Specification
Printout Grade Set
Return to GRADE ID Menu

Select with arrow keys, then use <ENTER>
```

Figure 10-16: Setup Grade Identification Menu

10.3.2.1 BURN PARAMETERS

Select "Burn Parameters" from the Setup Grade Identification Menu. Enter burn parameters for preburn and exposure cycles. Then enter timing for flush, preburn and exposure. An internal standard must be assigned for the appropriate matrix element, i.e., Fe for ferrous base, Al for aluminum base. When all parameters are completed, select "ACCEPT" to exit the parameter file.

```
SETUP GRADE IDENTIFICATION GRADESET : FIN_5

        Change burn parameters

                ACCEPT

Preburn parameter #1     : NO
Preburn parameter #2     : NO
Preburn parameter #3     : NO

Expose  parameter #1     : NO
Expose  parameter #2     : NO
Expose  parameter #3     : NO

Flush   time             :  0 sec
Preburn time             :  2 sec
Expose  time             :  3 sec

Internal standard        : NONE

Select with arrow keys, then use <ENTER>
```

Figure 10-17: Burn Parameter Table

10.3.2.2 GRADE SPECIFICATION

Select "Grade Specification" from the Setup Grade Identification Menu and then select the grade file. All available analytical lines are displayed on the Grade Identification screen. Select the elements of interest and define asymmetric tolerance values; Low % is Low Tolerance Value and High % is High Tolerance Value. The available tolerance values are displayed in the tolerance box on the screen and proper low and high values must be selected for each required element. The internal standard element must be selected to measure the matrix element intensity. If any element has a residual concentration level or does not contribute to differentiate one material from others, the element should not be selected.

For elements requiring two lines to cover the concentration range, the appropriate line must be selected in order to measure the correct intensity. For example, a nickel concentration range can extend from trace levels to 35% in various alloys in ferrous base materials. In order to cover the wide concentration range, two different lines are installed, a sensitive line to measure low concentrations and a less sensitive line to measure high concentrations. If a material contains a low nickel concentration, such as low alloy steel, the sensitive nickel line must be selected.

For the initial setup, the Original Values will not be available. When the calibration is completed, the Original Values will be automatically inserted for all assigned elements. After the reference material is measured, the specification can be re-edited. Any element can be deleted or inserted as required. The Original Values will be automatically retrieved and inserted correctly for the added element.

As many Grade Specification files can be created as required. However, in order to differentiate one material from another, and to identify unknown materials, a minimum number of files should be created and each file should contain tolerance limits for the key elements of the specified grade.

```
                    SETUP GRADE IDENTIFICATION GRADESET : FIN_5
                          MODIFYING GRADE : SS 403

  TOLERANCES
      5   %
     10          h %     Org_val      Elmt    Low %  High %     Org_val
     15
     20                          ACCEPT
     25
     30                                  B
     35                                  C
     40          20                      Co*2
     45                                  Cr*2      20       20
     50          2        Changing element : W
     60                                                      20
     70                          ACCEPT
     80          2
     90          2   Low  tolerance present  : YES           20
    100                                                       20
    120              Low  tolerance value    :   15 %
    140
    160          1   High tolerance present  : YES
    180          1                                           15
    200              High tolerance value    :   20 %

                 Select with arrow keys, then use <ENTER>
```

Figure 10-18: Grade ID Specification Table

10.3.2.3 STANDARDIZATION

Standardization, or drift correction, is available in the Grade ID program. Select "Standardize" from Grade ID menu. By correcting for instrumental drift, the original element intensities of various material files can be utilized for a long period of time.

```
                    SETUP GRADE IDENTIFICATION GRADESET : TEST

Elmt        Low        High                Elmt       Low        High
                                           ACCEPT
Al    A7               D10                 B
BkG                                        C
Co*1                                       Co*2
Cr*1                                       Cr*2  A7               G5
Cu*1  A7               C11                 Cu*2
Fe*L                                       Fe*R
FeUV                                       Mg*1
Mn*1  A7               C11                 Mn*2
Mo    A7               D10                 Nb
Ni*1                                       Ni*2  A7               G5
Ni*3                                       P
Pb*1                                       S
Si*1  A7               D10                 Sn
Ti                                         V     A7               C11
W

                 Select with arrow keys, then use <ENTER>
```

Figure 10-19: Standardization Table

Assign low and high standardization standards for all elements of interest except the internal standard element. Low and high values will be automatically inserted when the initial standardization is completed.

10.3.2.4 PRINTOUT GRADESET

All information in the grade file will be printed out. Be sure to turn the printer on.

10.3.2.5 RETURN TO GRADE ID MENU

When all information is entered in the file, exit to the Grade ID Menu.

10.3.2.6 STANDARDIZE

The initial standardization will measure and record the defined low and high standardization standards for the first time. Measure all required standards at least 3 or 4 times and accept averages.

```
                    GRADE IDENTIFICATION GRADESET : TEST
            STANDARDIZING FILE : TEST     STANDARD : A7

Elmt        Burn #1      Burn #2      Burn #3      Burn #4      Average
Al            4503         4847         5115         4999         4866
Cr*2          4728         5090         5198         5195         5053
Cu*1          3444         3719         3833         3809         3701
Mn*1          8083         8633         8831         8777         8581
Mo            4168         4450         4515         4504         4409
Ni*2         31327        31218        30834        30973        31088
Si*1          2600         2823         2888         2887         2799
V             3330         3624         3691         3685         3583
Fe*R REF     32464        29688        29013        29064        30057

Press trigger to start, <RESET> + <AV/PRINT> = RESET, <AV/PRINT> = MENU
```

Figure 10-20: Initial Standardization Display

The periodic standardization measures the defined low and high standardization standards and calculates the standardization factor and offset values for all elements. These standardization values make corrections on current intensity levels by comparing them with the original values when the calibration was first performed. Measure all standards at least 2 or 3 times and accept the averages. On completion, the new standardization factors and offset values will be displayed in addition to the last measured and original value intensities of that standard.

GRADE IDENTIFICATION GRADESET : TEST
STANDARDIZATION FILE : TEST

Elmt	factor	offset	lst_m_hi	lst_m_lo	org_v_hi	org_v_lo
Mn*1	1.04	-649	40152		41085	
V	1.04	-271	29572		30460	
Cu*1	0.95	57	9494		9118	

--- Type any key to continue ---

Figure 10-21: Standardization Factors and Offset Values

10.3.2.7 Measure Reference Material

Select "Measure Reference Material" from the Grade Identification menu. Prepare all reference materials for sparking. Measure all required standards at least 3 to 4 times and accept averages. If a large deviation is observed, the burn can be deleted to obtain a better average. Measure all reference materials in the same manner.

CHECK CALIBRATION IN GRADE SET : TEST
CALIBRATING GRADE : SS 403

Elmt	Burn #1	Burn #2	Burn #3	Burn #4	Average
Al	4947	5196	5331	5358	5208
Co*1	20380	20995	20682	20605	20665
Cr*2	172832	183038	184978	184739	181397
Mn*1	87522	93097	90060	89109	89947
Mo	73893	73750	73951	71966	73390
Ni*2	303463	317874	319622	319580	315135
Si*1	6529	6804	6850	6802	6746
V	11603	12278	12258	12133	12068
Fe*R REF	23450	22267	22174	22155	22512

ACCEPT DELETE BURN #1 DELETE BURN #2 DELETE BURN #3 DELETE BURN #4

Figure 10-22: Measuring Reference Material Display

10.3.2.8 IDENTIFY MATERIALS

The program is now ready for material identification. Select "Identify Materials" from the Grade Identification menu. Analyze samples to identify the alloy, grade or material. When the measurement is completed, the screen displays "UNKNOWN" if a matched grade is not found. If a matched grade is found, the grade identity will be displayed on the screen. At the bottom of the screen, the number of burns is indicated and if more than one grade is found, the screen displays the number of matching grades. The screen display also flashes the grade identity names. The program will return to the Grade Identification menu by pressing the <RESET> and <AV/PRINT> buttons at the same time on the gun. If a confirmation is desired on the sample, press the <RESET> button. The "Recheck" allows making another measurement on the same sample.

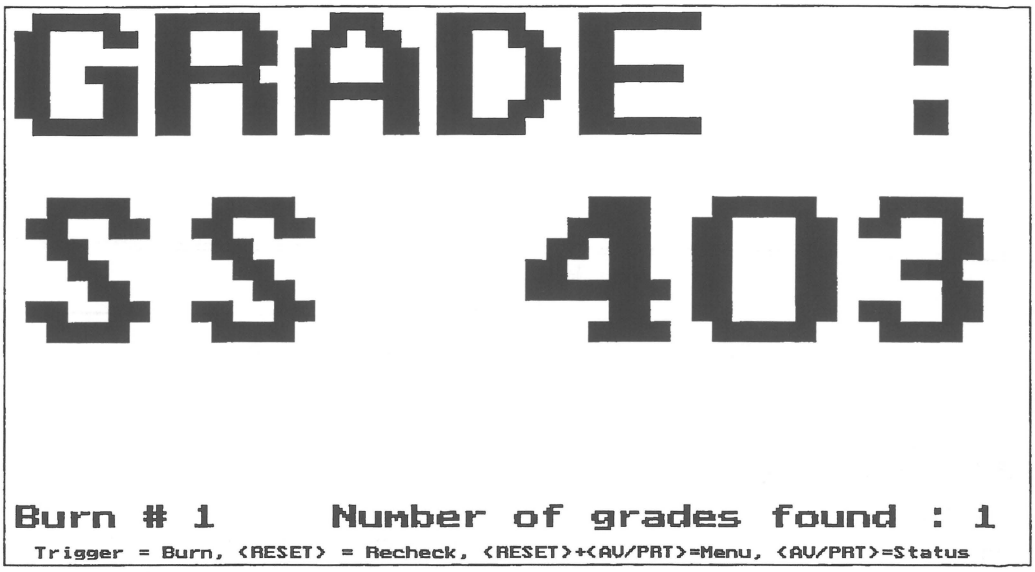

Figure 10-23: Example of Matched Grade

If detailed information is required, press the <AV/PRINT> button for status. All intensities from the sample are displayed on the screen. If a hardcopy is required, press the <AV/PRINT> button, otherwise press the <RESET> button to continue.

```
                    IDENTIFY MATERIALS

        STANDARDIZED INTENSITIES IN GRADE : TEST

   Al          40563        B           2030
   BkG          2524        C           2125
   Co*1         8258        Co*2       18106
   Cr*1        50188        Cr*2       63093
   Cu*1        19914        Cu*2       73449
   Fe*L        11736        Fe*R       35855
   FeUV         2385        Mg*1       22850
   Mn*1        15630        Mn*2       34651
   Mo          18633        Nb         16514
   Ni*1        47650        Ni*2      176402
   Ni*3       121796        P           2329
   Pb*1        10370        S           2279
   Si*1        22836        Sn          2187
   Ti           4284        V           6114
   W            4518

        <AV/PRINT> to print, <RESET> to continue
```

Figure 10-24: Intensity Display of Status Screen

10.3.2.9 Identify With Analysis Report

This function includes Identify Materials with the addition of a report. Select "Identify with Analysis Report" from the Grade Identification Menu. Additional identification notes can now be entered which will be printed along with the test results.

```
                    IDENTIFY MATERIALS WITH REPORTING

   Operator name ? John Smith
   Lot           ? L-6381
   Type          ? T-HFL
   Size          ? S-854
   Heat          ? TEAT
   Customer ref. ? Ref-3811
   Our ref.      ? B-1815
   Customer name ? Specialized Steels
```

Figure 10-25: Example of Report Entry

After the analysis is completed, a hardcopy can be obtained by pressing the <RESET> and <AV/PRINT> buttons at the same time. A complete report will be printed including the pre-entered notes, date and time.

```
                    IDENTIFY MATERIAL
------------------------------------------------------------------------

    Mode                    : Alloy Identification
    Start                   : 5-dec-1997    Time    11:38
    Operator                : John Smith
    Lot                     : L-6381
    Type                    : T-HFL
    Size                    : S-854
    Heat                    : TEAT
    Customer ref.           : Ref-3811
    Our ref.                : B-1815
    Customer name           : Specialized Steels
------------------------------------------------------------------------
Analysis nr.          Time       Grade found
------------------------------------------------------------------------

 1                    11:41     T-117
 2                    11:42     AL-942
 2                    11:43     AL-942     ****  RECHECK  ****
 3                    11:47     4328-C
 4                    12:25     T-117
------------------------------------------------------------------------
    Finish  :                5-dec-1997       Time   11:44
    Notes   :                Procedure 9115
------------------------------------------------------------------------
```

Figure 10-26: Example of Hardcopy Report

If the gun is not securely pressed against a sample during sparking, or a burn is prematurely terminated, the following message will be displayed. Follow the instructions and make another burn on a new area of the sample.

```
TRIGGER RELEASED TOO EARLY
PRESS <RESET> TO CONTINUE
```

Figure 10-27: Incomplete Sparking

10.3.3. QUANTITATIVE ANALYSIS

This program provides for analyzing unknown samples using the conventional calibration method. See Sections 4 through 9 in the Baird Arc/Spark Software Manual (p/n 084449).

10.4 MAINTENANCE

10.4.1. ELECTRODE

10.4.1.1 GAP SPACING

The electrode in the gun must be installed with the proper gap spacing between the electrode tip and the sample surface. It is important to maintain a consistent gap to optimize analytical performance. The gap spacing is 1.25 mm. A gap spacing tool (p/n 077500) is provided with two different gapping sizes. Use the thinner end.

Procedure:

- Turn off the source unit.
- Locate the electrode locking screw on the left side of the gun.
- Select the correct hex wrench from the kit provided.
- Insert the gap spacing tool into the gun tip. Use the 1.25 mm gap end.
- Loosen, then tighten, the locking screw while holding the gap spacing tool firmly against the gun.

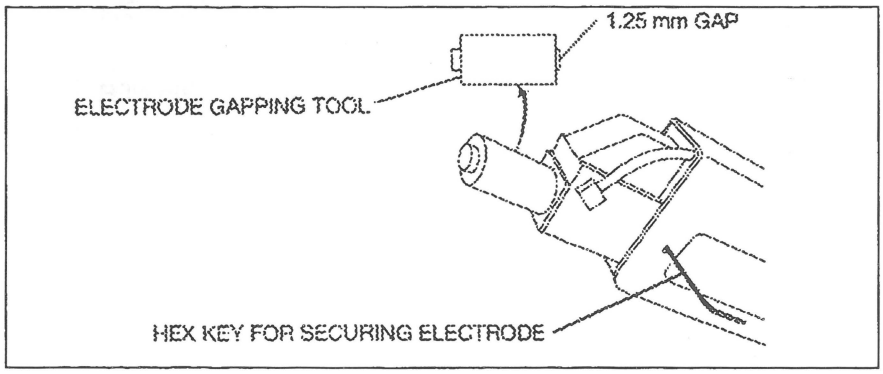

Figure 10-28: Gapping Electrode

10.4.1.2 CLEANING

The electrode must be cleaned after every burn using the electrode cleaning brush supplied. Insert the brush into the spark chamber and rotate the brush over the electrode tip. The electrode is silver, which is very soft, so it is important to clean it <u>only</u> with the brush provided.

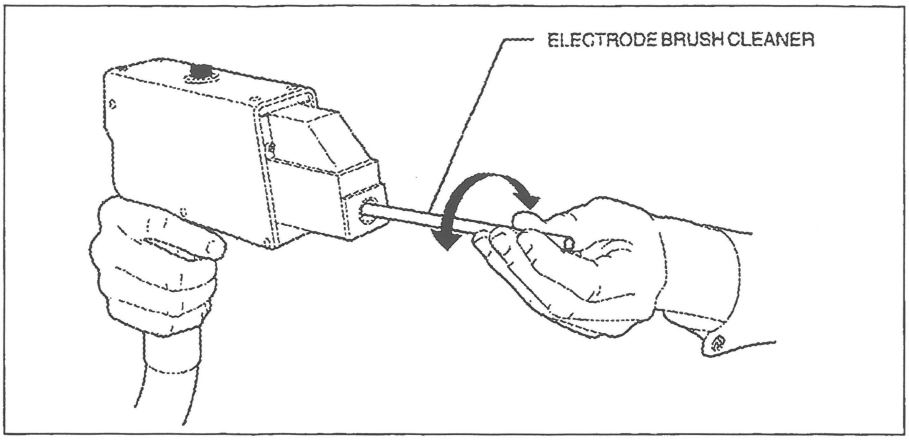

Figure 10-29: Cleaning Electrode

10.4.1.3 SHARPENING

With time, the electrode tip will burn away and the gap spacing will increase. The proper tip is a 90 degree conical point and the surface should be smooth. The Baird electrode sharpener is recommended for this purpose. (Baird p/n 068357)

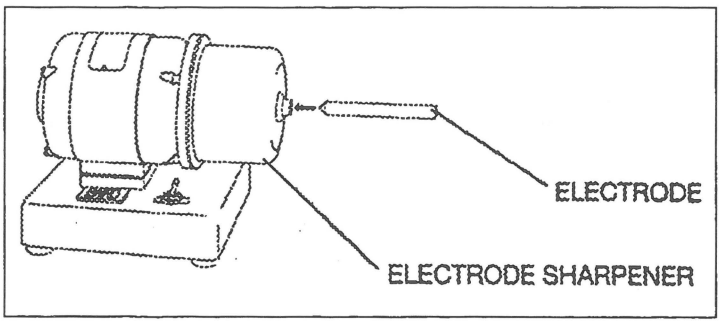

Figure 10-30: Sharpening Electrode

10.4.2. ENTRANCE WINDOW

10.4.2.1 CLEANING

During operation, argon gas is flushed across the surface of the entrance window. While this minimizes soot buildup, periodic cleaning is recommended.

Procedure:

- Turn off the source unit.
- Dip a cotton swab in isopropyl alcohol.
- Shake off excess fluid and insert into the window opening. Gently twist the swab.

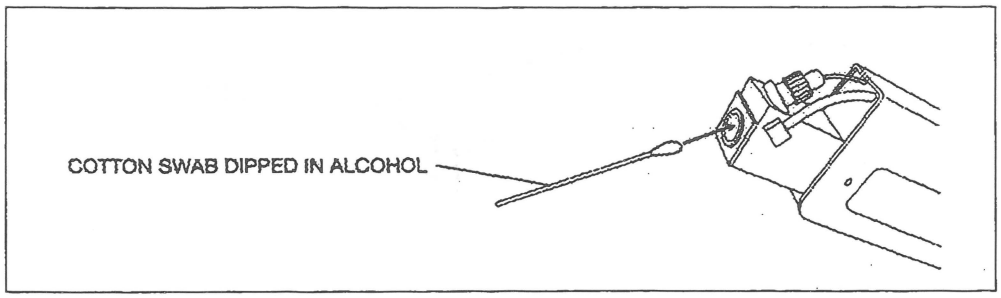

Figure 10-31: Cleaning Entrance Window

10.4.2.2 REPLACING

With heavy use, the entrance window will begin to darken due to the strong UV light exposure from sparking. This will eventually cause a light intensity loss. The window must therefore be replaced periodically.

Procedure:

- Turn off the source unit.
- Remove the dust cover by removing the two holding screws.
- Remove the two screws securing the optic barrel. The fiber optic will be pressing the barrel forward. Hold the barrel gently in place while removing the screws.

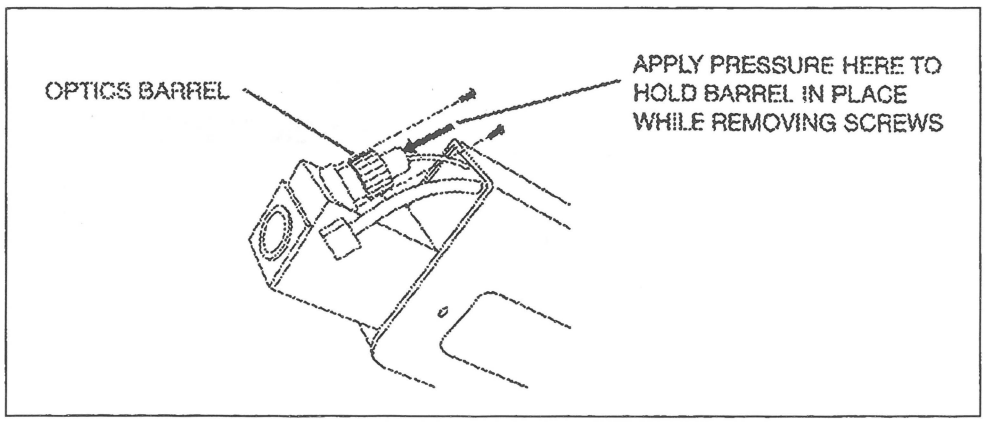

Figure 10-32: Removing Window

- Remove the old window by pushing it with a cotton swab.
- Before installing the new window, clean it carefully with a cotton swab dipped in isopropyl alcohol.
- Dry the window thoroughly before re-assembly.
- Be sure the O-ring is not damaged and is centered in the nose block before installing the new window.

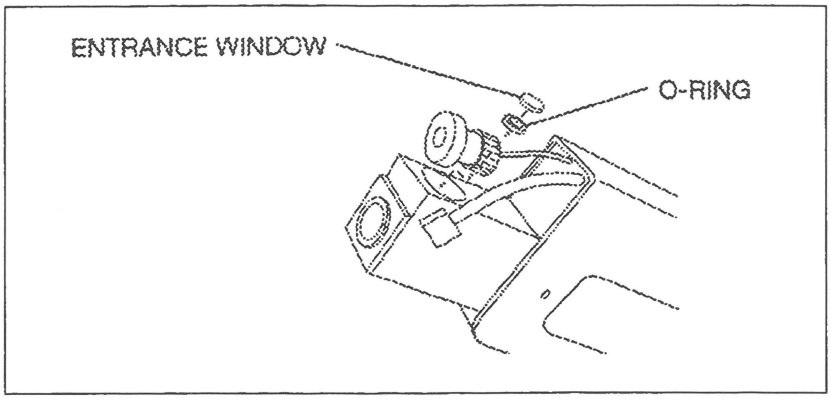

Figure 10-33: Replacing Window

- Reassemble carefully. The fiber optic is delicate and difficult to replace.
- With the new window, intensity values for most elements will be different. It is therefore important to standardize the system before testing any materials.

10.4.3. Cooling Fan

10.4.3.1 Cleaning

The screen on the back of the gun that protects the fan will gradually collect dirt. Use a small brush to keep the screen clean.

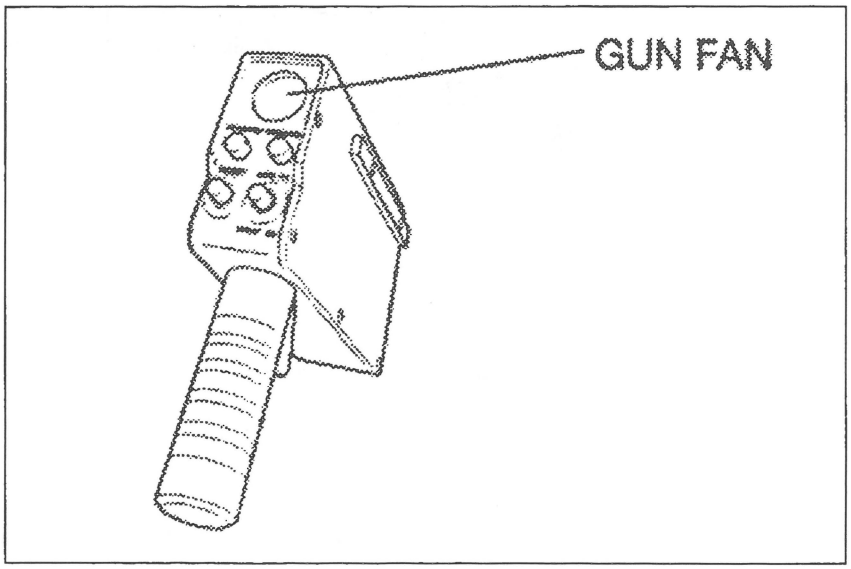

Figure 10-34: Cleaning Fan and Screen

APPENDIX A REPLACEMENT PARTS AND CONSUMABLE ITEMS

This appendix provides a listing of spare parts and replacement items that should be available to ensure the maximum utility of the instrument. The listing includes two general categories:

- Consumable items and parts which might need replacement during normal operation of the instrument. It is strongly recommended that a small stock of these items be maintained at all times.
- Items that may need to be replaced over a period of time.

In special situations, other parts may be required to maintain the operation of the instrument. These parts are listed in the Customer Engineering binder provided with your instrument.

Information on additional supplies, parts, replaceable items, consumable items (such as set up standards for standardization), optional accessories and items used with peripherals (such as printer paper) are listed in the Baird Spectrochemical Equipment, Accessories and Parts Catalog (the Red Book). A copy of this catalog is available at no charge from Baird or your local Baird Representative.

All parts should be ordered from:

Baird
27 Forge Parkway
Franklin, MA 02038
(508) 520-1880

or call your local Baird representative.

When ordering spare parts or replacement parts, it is recommended that you provide the part number, a description of the part and the model number of the instrument for which it will be used.

Consumable items and parts that might need replacing during normal operation include:

056809	Silicone Grease (2 oz. jar)
060735	Kit, Analytical Stand Cleaning
080408	Brush Electrode Cleaner
081201	Electrode, Insulator
081202	Counter Electrode (Tungsten)
081332	Compression Spring (Counter Electrode)
081600	O-Ring, Electrode Screw, Sample Stand
081976	Screw Electrode Holding, Sample Stand
081994	O-Ring, Sample Stand
083768	Spacer Gap, 4 mm

For information about other parts, please contact your local Baird sales or service representative.

APPENDIX B SPECIFICATIONS

General			
Instrument			Optical Emission Spectrometer
Optics			0.75 meter, Paschen-Runge mount
	Diffraction Grating	3/4 meter	1071 grooves/mm
			(wavelength range, 210 to 781 nm, 1st order)
			or
			2010 grooves/mm
			(wavelength range, 210 to 420 nm, 1st order)
		1/2 meter	2700 grooves/mm
			wavelength range 160 to 210 mm, (2nd order)
	Entrance Optics	(both)	
		Entrance Window	Quartz
		Entrance Slit Width	15 microns
	Exit Optics	(both)	
		Exit Slit Width	25 to 75 microns (dependent on element)
		Photomultiplier Tubes	R1657 (solar blind for low UV wavelengths)
			R1414 (for mid UV and visible wavelengths)
		Number of Channels	32 maximum
	Excitation Source		HR-400 spark source for general purpose analysis of ferrous and non-ferrous samples
	Frequency		200 to 400 Hz (depending on matrix)
	Peak Voltage		300 V
	Cycle Time		Typically 17 seconds
	Sample Shape		Flat
			32-50 mm (1.25 - 2.0") diameter
			6-25 mm (0.25 to 1.00") thick
			Sample stand is open and can accommodate large samples up to 75 mm (3.0") thick
			Adapter for pin and rod samples is available.
	Purging Gas		Argon 99.996% assay, - 60 °C (-76 °F) dew point O_2 less than 5 ppm (0.0005%)
			20-25 psi (140-172 K P_a)
	Flow Rate		12 SCFH (5.8 L/min) during a measurement
			2 SCFH (1 L/min) between measurements
	Operating Environment		Temperature 13-35 °C (55-95 °F)
			Relative humidity range 20-80%
	Power Requirements		
		Source	220 VAC ± 10%, 3 wire, single phase, EMI free,
			50/60 Hz, 4 Amps
		Spectrometer	220 VAC ± 10%, 3 wire, single phase, EMI free, 50/60 Hz, 1 Amp

	Computer/Printer	220 or 110 VAC ± 10%, 3 wire, single phase, EMI free, 50/60 Hz
Dimensions		100 cm (39.5") W x 61 cm (24") D x 65 cm (25.75") H
Weight		141 kg (310 lb.) net (including ½ meter optics)

INDEX

T

W

Reader's Comment Form

Manual Title: _____

Part Number: _____

Please use this form to communicate your views about this manual.

Please rate this manual's:	Excellent	Good	Fair	Poor
Clarity	_____	_____	_____	_____
Completeness	_____	_____	_____	_____
Ease of Use	_____	_____	_____	_____
Examples	_____	_____	_____	_____
Illustrations	_____	_____	_____	_____
Organization	_____	_____	_____	_____
Index	_____	_____	_____	_____

If you have found errors in this manual, please list them with their page numbers:

_____

_____

_____

_____

Do you have any comments regarding Baird's technical manuals?

_____

_____

_____

Please provide us with the following information:

Your Name: _____

Your Occupation: _____

Company Name: _____

Address: _____

Please fax your comments to (508) 520-1732. Thank you for your assistance!